F | Free Sync | 2560 x 1440 | DISPLAY PORT | HDMI | ECO | USB HUB | VESA

Get ahead with the G2740QSU with IPS Panel Technology and 1ms MPRT

Featuring IPS technology with 75Hz refresh rate and 1ms MPRT, the 27'' WQHD G2740QSU guarantees super image quality. The ability to customize the screen settings using the predefined and custom gaming modes along with the Black Tuner function gives you total control over the dark scenes and makes sure details are always clearly visible.

1ms

Fast response time is key to ultra-smooth gaming. It reduces ghosting and blurring providing the user with an improved graphic performance.

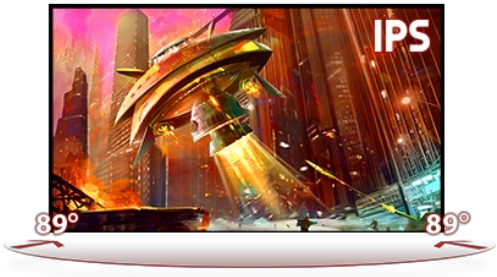

IPS TECHNOLOGY

Covering 100% of the sRGB colour range, this IPS panel provides outstanding colour accuracy and wider viewing angles guaranteeing high-fidelity, vivid battleground scenes.

01 DISPLAY CHARACTERISTICS

Diagonal	27", 68.6cm
Panel	IPS LED, matte finish
Native resolution	2560 x 1440 @75Hz (3.7 megapixel WQHD)
Aspect ratio	16:9
Panel brightness	250 cd/m²
Static contrast	1000:1
Advanced contrast	80M:1
Response time (MPRT)	1ms
Viewing zone	horizontal/vertical: 178°/178°, right/left: 89°/89°, up/down: 89°/89°
Colour support	16.7mln
Horizontal Sync	31 - 120kHz
Viewable area W x H	596.7 x 335.7mm, 23.5 x 13.2"
Pixel pitch	0.233mm
Colour	matte, black

02 INTERFACES / CONNECTORS / CONTROLS

Signal input	HDMI x1 (v.1.4) DisplayPort x1 (v.1.2)
USB HUB	x2 (v.2.0 DC5V, 500mA)
HDCP	yes
Headphone connector	yes

03 FEATURES

Blue light reducer	yes
Flicker free	yes
Adaptive Sync support	2560 x 1440 @48-75Hz
OSD languages	EN, DE, FR, ES, IT, RU, JP, CZ, NL, PL
Control buttons	Power, joystick controller: Menu, Up/ i-Style colour, Down/ Input Select, Left/ Eco Mode, Right/ Volume
User controls	picture adjust (contrast, brightness, OD, ACR, ECO, blue light reducer, black tuner, colour saturation, gamma), input select (auto, manual), audio (volume, mute), store user settings, colour settings (colour temp., user preset), image adjust (i-Style colour, sharp and soft, HDMI RGB range, video mode adjust), language, setup menu (OSD H. position, OSD V. position, OSD time, opening logo, AMD FreeSync, MBR), display information, recall
Speakers	2 x 2W
Convenience	Kensington-lock™ prepared, DDC2B, Mac OSX

04 MECHANICAL

Display position adjustments	tilt
Tilt angle	22° up; 4° down
VESA mounting	100 x 100mm
Cable management system	yes

05 ACCESSORIES INCLUDED

Cables	power, USB, HDMI, DP

Other	quick start guide, safety guide

06 POWER MANAGEMENT

Power supply unit	internal
Power supply	AC 100 - 240V, 50/60Hz
Power usage	23W typical, 0.5W stand by, 0.5W off mode

07 SUSTAINABILITY

Regulations	CE, TÜV-Bauart, EAC, VCCI-B, PSE, RoHS support, ErP, WEEE, REACH
Energy efficiency class (Regulation (EU) 2017/1369)	F
REACH SVHC	above 0.1%: Lead

08 DIMENSIONS / WEIGHT

Product dimensions W x H x D	611.5 x 434 x 239mm
Box dimensions W x H x D	692 x 452 x 147mm
Weight (without box)	4.6kg
Weight (with box)	6.2kg
EAN code	4948570117987

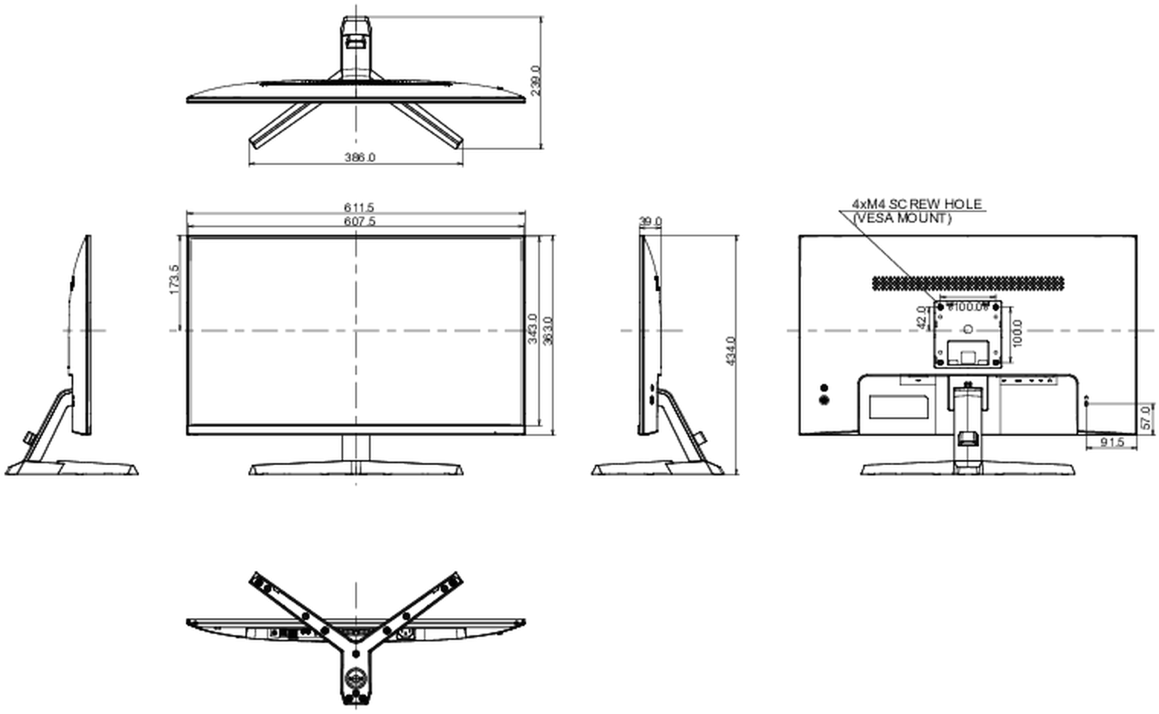

All trademarks and registered trademarks acknowledged. E & O E. Specification subject to change without notice. All LCD's comply with ISO-9241-307:2008 in connection with pixel defects.

© IIYAMA CORPORATION. ALL RIGHTS RESERVED