12.1'' PCAP 10pt touchscreen solution for pick-up points

Built into a rugged, edge-to-edge glass bezel the ProLite TF1215MC-B1 guarantees high durability and scratch-resistance, making it perfect for high use public facing applications. Landscape, portrait and face-up orientation ensure flexibility in any type of installation. It can operate in temperatures ranging from -20˚C-to 60˚C and is IP65 rated, resulting in dust and water resistance from the front making it a reliable solution for pick-up points and kiosks. For ease of integration, the TF1215MC-B1 can be equipped with optional external mounting brackets (OMK3-1) making it an ideal solution for kiosk integrators, industrial environments, control rooms and interactive multimedia.

Touch Through-Glass

This through glass touch screen works right through glass and can turn glass surfaces into an interactive touch screen display. Use it on storefront windows, real estate office, in-store for POS or restaurants.

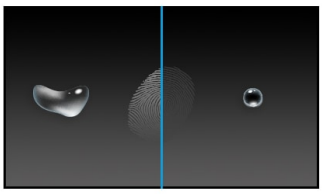

Anti-fingerprint coating

This special Nano coating ensures a smoother touch and less resistance in the swipe. It makes the screen less static and susceptible to dirt, dust, fingerprints and it improves the clarity of the content displayed on the screen.

01 DISPLAY CHARACTERISTICS

Design	Open Frame
Diagonal	12.1", 31cm
Panel	IPS Technology
Native resolution	1024 x 768 (0.8 megapixel)
Aspect ratio	4:3
Panel brightness	540 cd/m²
Brightness	450 cd/m² with touch
Light transmittance	85%
Static contrast	1000:1
Response time (BTB)	25ms
Viewing zone	horizontal/vertical: 178°/178°, right/left: 89°/89°, up/down: 89°/89°
Colour support	16.2mln (6bit + Hi-FRC)
Horizontal Sync	31.4 - 60kHz
Viewable area W x H	245.8 x 184.3mm, 9.7 x 7.2"
Pixel pitch	0.24mm
Bezel colour and finish	black

02 TOUCH

Touch technology	projective capacitive
Touch points	10 (HID, only with supported OS)
Touch method	finger, glove (latex), capacitive stylus
Touch interface	USB
Supported operating systems	All iiyama monitors are Plug & Play and compatible with Windows and Linux. For details regarding the supported OS for the touch models, please refer to the driver instruction file available in the downloads section.
Through-Glass	6mm
Palm rejection	yes

03 INTERFACES / CONNECTORS / CONTROLS

Analog signal input	VGA x1
Digital signal input	HDMI x1 DisplayPort x1
Audio output	Mini jack x1
HDCP	yes

04 FEATURES

Extra	anti-fingerprint coating, touch through-glass
Glass thickness	3.15mm
Glass hardness	7H
60950 Ball drop test	yes
Water and dust protection	IP65 (front)
Water tight seal	yes
OSD key lock	yes

05 GENERAL

OSD languages	EN, DE, FR, ES, IT, CN, JP
Control buttons	Menu, Scroll up / Brightness, Scroll down / Contrast, Select, Power
User controls	picture (contrast, brightness, H. position, V. position, phase, clock, auto adjust), advanced (colour temperature, sharpness), OSD (OSD timeout, OSD position, OSD H. position, OSD V. position, touch switch), option (reset, language, source select, display mode, factory)
Plug&Play	DDC2B

06 MECHANICAL

Orientation	landscape, portrait, face-up
VESA mounting	100 x 100mm
Operation temperature range (-°/+°)	-20°C - 60°C
Storage temperature range	- 20°C - 60°C

07 ACCESSORIES INCLUDED

Cables	power, USB, HDMI, DP
Guides	quick start guide, safety guide
Other	AC adapter, external control pad
Remote control	external control pad

08 POWER MANAGEMENT

Power supply unit	external
Power supply	DC 12 V
Power usage	10W typical, 0.55W stand by, 0.5W off mode

09 SUSTAINABILITY

Regulations	CE, EAC, RoHS support, ErP, WEEE, cULus, REACH
Energy efficiency class (Regulation (EU) 2017/1369)	F

10 DIMENSIONS / WEIGHT

Product dimensions W x H x D	308.5 x 248 x 41.5mm
Box dimensions W x H x D	435 x 355 x 165mm
Weight (without box)	2.1kg
Weight (with box)	3.9kg
EAN code	4948570118007

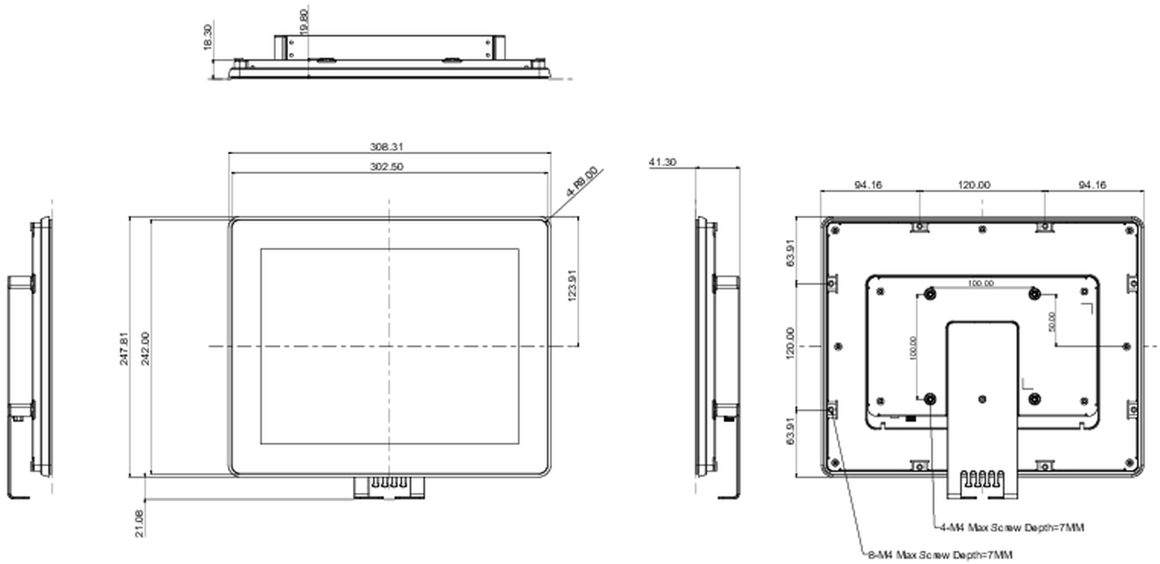

All trademarks and registered trademarks acknowledged. E & O E. Specification subject to change without notice. All LCD's comply with ISO-9241-307:2008 in connection with pixel defects.

© IIYAMA CORPORATION. ALL RIGHTS RESERVED