POE WebCam

## 10.1” PCAP 10pt touch screen with Android and Power over Ethernet Technology

The ProLite TW1023ASC-B1P touch panel PC is a perfect choice for high-use environments such as retail, interactive POS, information desks or hospitality applications. Thanks to the pre-installed Android operating system, it is possible to easily customize the monitor by installing applications directly to it.

The Power over Ethernet technology (POE) allows to provide both data connection and power by a single cable, simplifying all installations. This monitor can operate in landscape, portrait or face-up orientation. Together with the built-in camera, microphone and speakers it offers limitless, interactive installation possibilities.

### Connectivity

The RJ45 (LAN) connector supporting Power over Ethernet technology (POE) allows to provide both data connection and power by a single cable, which simplifies installation in areas where many cables would interfere with the environment.

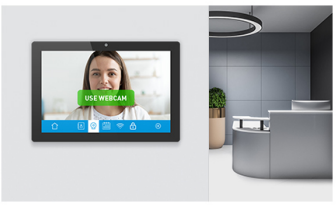

### Built-in webcam, microphone & speakers

Making the screen a perfect solution for semi or fully automated reception solutions allowing businesses to track and manage visitor traffic at the front desk lobby without compromising on the safety and security of your staff, visitors and company assets.

## 01 DISPLAY CHARACTERISTICS

| | |
|---|---|
| **Design** | Edge to edge glass |
| **Diagonal** | 10.1", 25.5cm |
| **Panel** | IPS Panel Technology, LED |
| **Native resolution** | 1280 x 800 (1 megapixel HD) |
| **Aspect ratio** | 16:10 |
| **Panel brightness** | 450 cd/m² |
| **Brightness** | 385 cd/m² with touch |
| **Light transmittance** | 85% |
| **Static contrast** | 1000:1 with touch |
| **Response time (GTG)** | 25ms |
| **Viewing zone** | horizontal/vertical: 160°/160°, right/left: 80°/80°, up/down: 80°/80° |
| **Colour support** | 16.7mln 8bit |
| **Viewable area W x H** | 216.6 x 135.4mm, 8.5 x 5.3" |
| **Pixel pitch** | 0.1692mm |
| **Bezel colour and finish** | black, matte |

## 02 TOUCH

| | |
|---|---|
| **Touch technology** | projective capacitive |
| **Touch points** | 10 |
| **Touch method** | finger, glove (latex), capacitive stylus |
| **Touch interface** | USB |

## 03 INTERFACES / CONNECTORS / CONTROLS

| | |
|---|---|
| **Digital signal output** | HDMI x1 (mini HDMI, 1280x720 @60Hz) |
| **Audio output** | Speakers 2 x 1.5W |
| **USB ports** | x2 (2.0, 1 x MICRO with OTG) |
| **RJ45 (LAN)** | x1 (PoE - IEEE802.3af/15.4W) |
| **Microphone** | 1 |

## 04 FEATURES

| | |
|---|---|
| **Integrated software** | Android 11 |
| **CPU** | Rockchip RK3288, quad-core Cortex--A17 up to 1.8GHz |
| **GPU** | Quad-core cortex A17 |
| **Storage** | 16GB eMMC |
| **Memory** | 2GB DDR3 |
| **WiFi** | IEEE802.11b/g/n |
| **Bluetooth** | 4.0 |
| **Extra** | auto-rotation, webcam (2 megapixel), microphone, SD card slot, anti-fingerprint coating |
| **Max. non-stop operating time** | 24/7 |
| **Glass thickness** | 1.25mm |
| **Glass hardness** | 7H |

## 05 GENERAL

| | |
|---|---|
| **Applications** | install new application / manage application, lock application, calculator, calendar, camera, chrome, alarm / clock / timer / stopwatch, email, manage files and folders, manage images / video / audio, organize albums, manage power on/off time, play audio files, search engine, system preferences, sound recorder, play video files |

## 06 MECHANICAL

| | |
|---|---|
| **Orientation** | landscape, portrait, face-up |
| **VESA mounting** | 75 x 75mm |

## 07 ACCESSORIES INCLUDED

| | |
|---|---|
| **Guides** | quick start guide, safety guide |
| **Other** | AC adapter |
| **Cable cover** | yes |

## 08 POWER MANAGEMENT

| | |
|---|---|
| **Power supply unit** | external |
| **Power supply** | DC 12 V |
| **Power usage** | 7W typical |

## 09 SUSTAINABILITY

| | |
|---|---|
| **Regulations** | CE, RoHS support, ErP, WEEE, REACH |
| **REACH SVHC** | above 0.1%: Lead |

## 10 DIMENSIONS / WEIGHT

| | |
|---|---|
| **Product dimensions W x H x D** | 255 x 172 x 30.5mm |
| **Box dimensions W x H x D** | 398 x 223 x 68mm |
| **Weight (without box)** | 0.8kg |
| **Weight (with box)** | 1.36kg |
| **EAN code** | 4948570117116 |

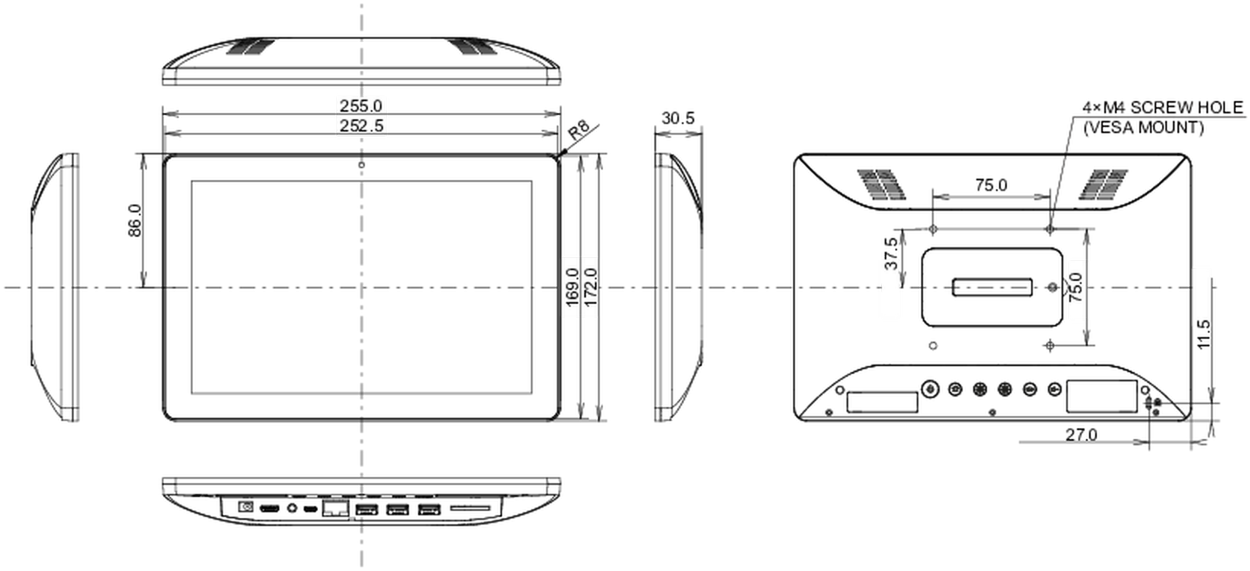


*All trademarks and registered trademarks acknowledged. E & O E. Specification subject to change without notice. All LCD's comply with ISO-9241-307:2008 in connection with pixel defects.*

© IIYAMA CORPORATION. ALL RIGHTS RESERVED