Open Frame PCAP 10 point touch screen equipped with a foam seal finish for seamless integration

The ProLite TF1015MC (10.1 inch) uses PCAP touch technology and is built into an eye catching bezel with edge-to-edge glass. Thanks to a glass overlay covering the screen and a rugged bezel, it guarantees high durability and scratch-resistance, making it perfect for kiosk and high use public facing applications. Equipped with a foam seal finish it supports seamless integration into kiosks and provides IP65 rating resulting in dust and water resistance from the front. Landscape, portrait and face-up orientation ensures flexible mounting possibilities in almost any installation. For ease of integration, the TF1015MC can be equipped with optional external mounting brackets (OMK2-1) making it an ideal solution for kiosk integrators, industrial environments, control rooms and interactive multimedia.

Touch Through-Glass

This through glass touch screen works right through glass and can turn glass surfaces into an interactive touch screen display. Use it on storefront windows, real estate office, in-store for POS or restaurants.

Foam Seal

A foam seal finish (8mm) around the monitor ensures seamless integration and optimal dust protection.

01 DISPLAY CHARACTERISTICS

Design	Open Frame
Diagonal	10.1", 25.7cm
Panel	VA
Native resolution	1280 x 800 (1 megapixel)
Aspect ratio	16:10
Panel brightness	500 cd/m²
Brightness	450 cd/m² with touch
Light transmittance	90%
Static contrast	1300:1
Response time (BTB)	25ms
Viewing zone	horizontal/vertical: 170°/170°, right/left: 85°/85°, up/down: 85°/85°
Horizontal Sync	31.4 - 49.7kHz
Viewable area W x H	216.96 x 135.6mm, 8.5 x 5.3"
Pixel pitch	0.1695mm
Bezel colour and finish	black

02 TOUCH

Touch technology	projective capacitive
Touch points	10 (HID, only with supported OS)
Touch method	stylus, finger, glove (latex)
Touch interface	USB
Supported operating systems	All iiyama monitors are Plug & Play and compatible with Windows and Linux. For details regarding the supported OS for the touch models, please refer to the driver instruction file available in the downloads section.
Through-Glass	6mm

03 INTERFACES / CONNECTORS / CONTROLS

Analog signal input	VGA x1
Digital signal input	HDMI x1 DisplayPort x1
Monitor control input	RJ45 (LAN) x1
Audio output	Mini jack x1
HDCP	yes
USB ports	x1

04 FEATURES

Extra	anti-fingerprint coating, touch through-glass
Glass thickness	3.3mm
Glass hardness	7H
60950 Ball drop test	yes
Water and dust protection	IP65 (front)
Water tight seal	yes
OSD key lock	yes

05 GENERAL

OSD languages	EN, DE, FR, ES, IT, CN, JP
Control buttons	Menu, Scroll up/ Brightness, Scroll down/ Contrast, Select, Power
User controls	picture (contrast, brightness, H-position, V-position, phase, clock, auto adjust), advanced (color temp, sharpness), OSD (timeout, position, H-position, V-position, touch switch), option (reset, language, source select, display mode, factory)
Plug&Play	DDC2B

06 MECHANICAL

Orientation	landscape, portrait, face-up
VESA mounting	100 x 100mm
Operation temperature range	0°C - 40°C
Storage temperature range	- 20°C - 60°C
MTBF	50000 hours

07 ACCESSORIES INCLUDED

Cables	power (1.8m), USB (1.8m), HDMI (1.8m), DP (1.8m)
Guides	quick start guide, safety guide
Other	AC adapter, Touch Panel Driver Disk (CD-ROM), external control pad
Cable cover	yes
Remote control	yes

08 POWER MANAGEMENT

Power supply unit	external
Power supply	DC 12 V
Power usage	8W typical, 0.89W stand by, 0.31W off mode

09 SUSTAINABILITY

Regulations	CB, CE, RoHS support, ErP, WEEE, CU, cULus, REACH
Energy efficiency class (Regulation (EU) 2017/1369)	E
REACH SVHC	above 0.1%: Lead

10 DIMENSIONS / WEIGHT

Product dimensions W x H x D	260.5 x 183.5 x 39.5mm
Weight (without box)	1.4kg
EAN code	4948570116744

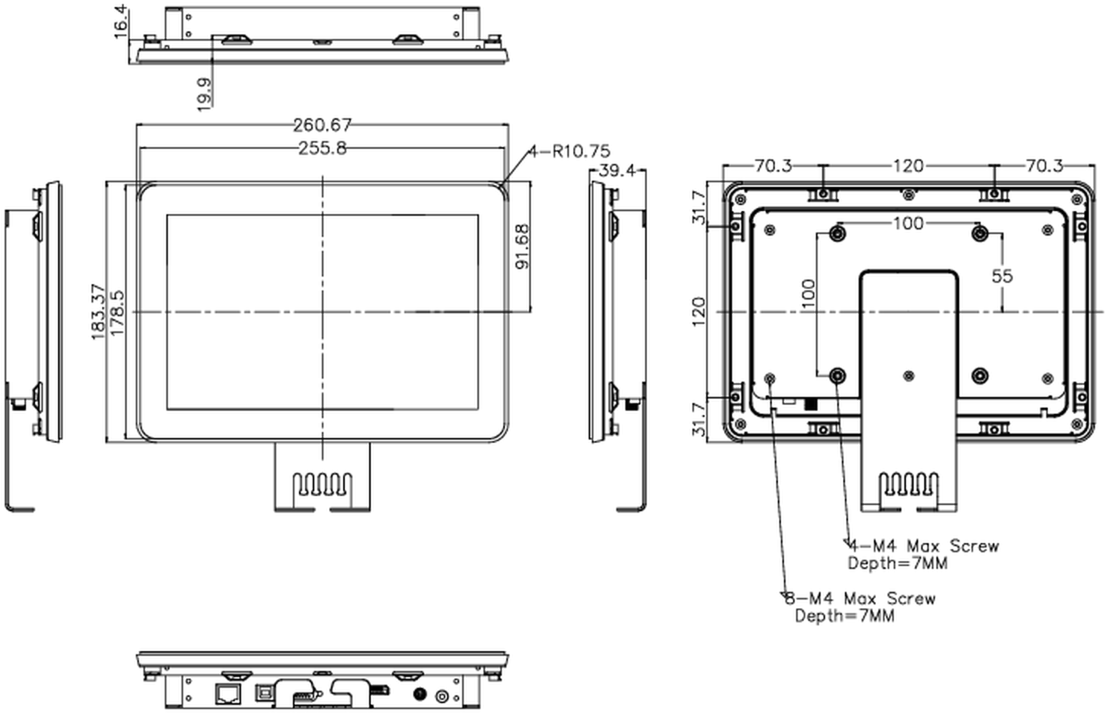

All trademarks and registered trademarks acknowledged. E & O E. Specification subject to change without notice. All LCD's comply with ISO-9241-307:2008 in connection with pixel defects.

© IIYAMA CORPORATION. ALL RIGHTS RESERVED