Full HD LED monitor with 1 ms response time, perfect choice for home and office

The ProLite B2483HS is an excellent 24” Full HD LED-backlit monitor with 1920 x 1080p resolution. It features 1ms response time and 80 000 000 : 1 Advanced Contrast Ratio, assuring clear and vibrant picture quality and high contrast. Triple Input support ensures compatibility with the latest installed graphics cards and embedded Notebook outputs. The ergonomic stand offers 13 cm height adjustment with pivot and swivel, making this screen suitable for a wide range of applications and environments where workplace flexibility and ergonomics are key factors. The monitor is TCO6 and Energy Star Certified. A perfect solution for education, local government, business and finance markets.

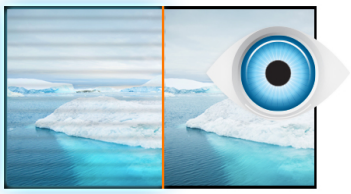

Flicker-free + Blue light

The ultimate solution for the comfort and health of your eyes. Flicker-free monitors with the blue light reducer function substantially reduce the strain and fatigue caused by flickering and blue light emittance of regular monitors.

HAS + Pivot

With a height adjustable stand you will create an ergonomic work posture and position that meets all health and safety requirements. This will not only prevent any health issues but will also increase your productivity. The pivot function allows the screen to rotate from landscape to portrait orientation. This functionality can be useful if the application requires more height than width.

01 DISPLAY CHARACTERISTICS

Diagonal	24", 61cm
Panel	TN LED, matte finish
Native resolution	1920 x 1080 @75Hz (HDMI&DisplayPort, 2.1 megapixel Full HD)
Aspect ratio	16:9
Panel brightness	250 cd/m²
Static contrast	1000:1
Advanced contrast	80M:1
Response time (GTG)	1ms
Viewing zone	horizontal/vertical: 170°/160°, right/left: 85°/85°, up/down: 80°/80°
Viewing zone CR>5	horizontal/vertical: 178°/170°, right/left: 89°/89°, up/down: 85°/85°
Colour support	16.7mln (sRGB: 99%; NTSC: 72%)
Horizontal Sync	30 - 80kHz
Viewable area W x H	531.4 x 298.9mm, 20.9 x 11.8"
Pixel pitch	0.276mm
Colour	matte

02 INTERFACES / CONNECTORS / CONTROLS

Signal input	VGA x1 HDMI x1 DisplayPort x1
HDCP	yes
Headphone connector	yes

03 FEATURES

Blue light reducer	yes
Flicker free	yes
OSD languages	EN, DE, FR, ES, IT, CN, RU, JP, CZ, NL, PL
Control buttons	Power, Menu/ Select, Scroll up/ Volume, Scroll down/ ECO, Exit, Input Select
User controls	picture adjust (contrast, brightness, OD, ACR, ECO. Blue Light Reducer), input select, audio adjust (volume, mute, digital audio), colour adjust, image adjust (auto adjust, H. position, V. position, clock, phase, sharpness, video mode adjust), language, setup (OSD position, OSD timeout, opening logo, auto power off), display information, reset
Speakers	2 x 1W
Convenience	Kensington-lock™ prepared, DDC2B, Mac OSX

04 MECHANICAL

Display position adjustments	height, pivot (rotation), swivel, tilt
Height adjustment	130mm
Rotation (PIVOT function)	90°
Swivel stand	90°; 45° left; 45° right
Tilt angle	22° up; 5° down
VESA mounting	100 x 100mm

05 ACCESSORIES INCLUDED

Cables	power, HDMI
Other	quick start guide, safety guide

06 POWER MANAGEMENT

Power supply unit	internal
Power supply	AC 100 - 240V, 50/60Hz
Power usage	24W typical, 0.5W stand by, 0.5W off mode

07 SUSTAINABILITY

Regulations	TCO Certified, CE, TÜV-GS, VCCI-B, PSE, RoHS support, ErP, ENERGY STAR ®, WEEE, EPEAT, CU, REACH
EPEAT Silver	EPEAT is a comprehensive environmental rating that helps identify greener computers and other electronic equipment. The Silver certification means the monitor meets all required criteria plus at least 50% of the optional requirements. EPEAT Silver is valid in countries where iiyama registers the product. Please visit www.epeat.net for the registration status in your country.
REACH SVHC	above 0.1%: Lead

08 DIMENSIONS / WEIGHT

Product dimensions W x H x D	565.5 x 378 (508) x 210mm
Weight (without box)	5.1kg
EAN code	4948570115624

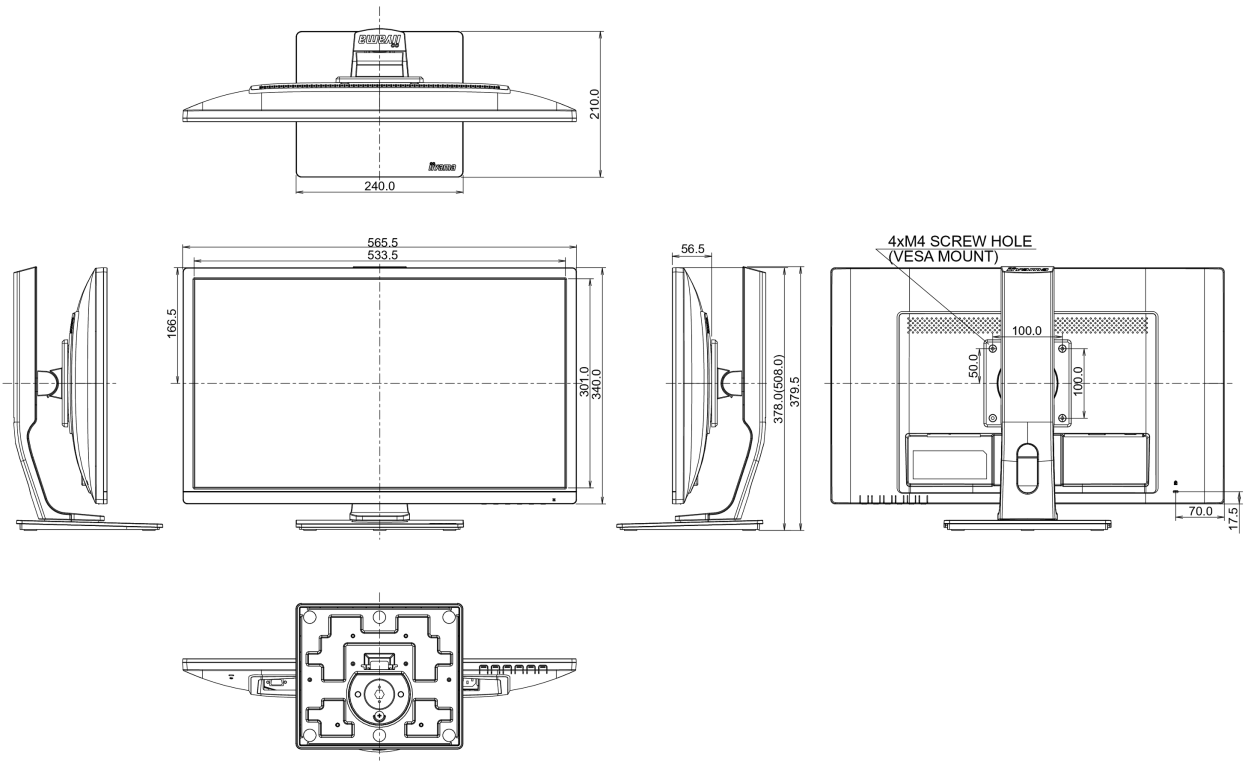

All trademarks and registered trademarks acknowledged. E & O E. Specification subject to change without notice. All LCD's comply with ISO-9241-307:2008 in connection with pixel defects.

© IIYAMA CORPORATION. ALL RIGHTS RESERVED