ProLite E2482HD meets the needs of every user

The ProLite E2482HD is an excellent 24" Full HD LED-backlit monitor with 1920 x 1080p resolution. It features 5ms response time and >12 000 000 : 1 Advanced Contrast Ratio, assuring clear and vibrant picture quality and high contrast. The E2482HD is also Energy Star Certified. This monitor is a reliable solution for both home and office use.

ACR

Contrast Ratio is a measurement of the difference between the darkest black and the brightest white your monitor can display. Advanced Contrast Ratio is a feature that automatically adjusts contrast and brightness of the screen to assure perfect picture quality while watching films and playing games.

Full HD

With true 1920 x 1080p resolution your monitor is ready to display high definition images. This means you can accommodate more information on your screen; e.g. 60% more in comparison to a 1280 x 1024 monitor.

01 DISPLAY CHARACTERISTICS

Diagonal	24", 61cm
Panel	TN LED, matte finish
Native resolution	1920 x 1080 (2.1 megapixel Full HD)
Aspect ratio	16:9
Panel brightness	250 cd/m²
Static contrast	1000:1
Advanced contrast	12M:1
Response time (GTG)	5ms
Viewing zone	horizontal/vertical: 170°/160°, right/left: 85°/85°, up/down: 80°/80°
Colour support	16.7mln
Horizontal Sync	30 - 80kHz
Viewable area W x H	531.4 x 298.9mm, 20.9 x 11.8"
Pixel pitch	0.277mm
Colour	matte

02 INTERFACES / CONNECTORS / CONTROLS

Signal input	VGA x1 DVI x1
HDCP	yes

03 FEATURES

Blue light reducer	yes
Flicker free	yes
OSD languages	EN, DE, FR, ES, IT, CN, RU, JP, CZ, NL, PL
Control buttons	Power, Menu/ Select, Scroll up, Scroll down/ ECO, Exit, Auto
User controls	auto adjust, luminance (brightness, contrast), geometry (H. position, V. position, pixel clock, phase), colour, OSD (H.position, V. poition, OSD time), language, recall, miscellaneous (sharpness, DDC/CI, display information, ACR, display mode, opening logo), input select
Convenience	Kensington-lock™ prepared, DDC/CI, DDC2B, Mac OSX

04 MECHANICAL

Display position adjustments	tilt
Tilt angle	22° up; 5° down
VESA mounting	100 x 100mm

05 ACCESSORIES INCLUDED

Cables	power, DVI
Other	quick start guide, safety guide

06 POWER MANAGEMENT

Power supply unit	internal
Power supply	AC 100 - 240V, 50/60Hz
Power usage	24W typical, 05W stand by, 05W off mode

07 SUSTAINABILITY

Regulations	CE, TÜV-GS, VCCI-B, RoHS support, ErP, WEEE, CU, REACH
EPEAT Silver	EPEAT is a comprehensive environmental rating that helps identify greener computers and other electronic equipment. The Silver certification means the monitor meets all required criteria plus at least 50% of the optional requirements. EPEAT Silver is valid in countries where iiyama registers the product. Please visit www.epeat.net for the registration status in your country.
REACH SVHC	above 0.1%: Lead

08 DIMENSIONS / WEIGHT

Product dimensions W x H x D	565.5 x 412 x 203mm
Weight (without box)	3.3kg

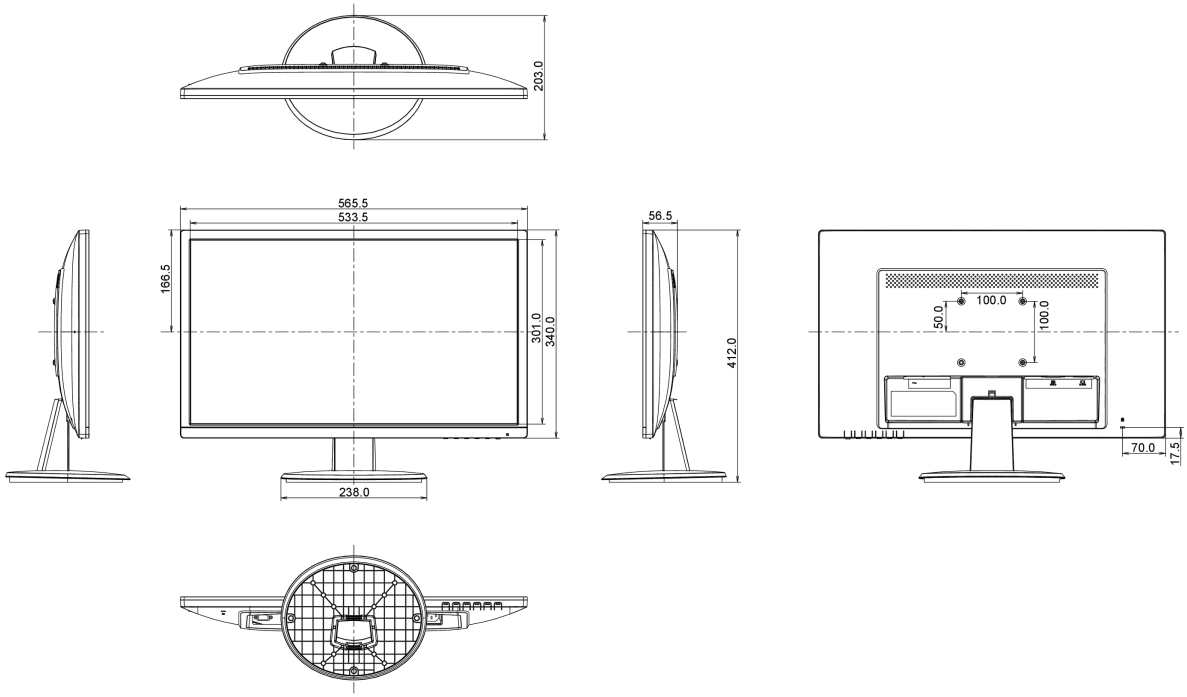

All trademarks and registered trademarks acknowledged. E & O E. Specification subject to change without notice. All LCD's comply with ISO-9241-307:2008 in connection with pixel defects.

© IIYAMA CORPORATION. ALL RIGHTS RESERVED