WEBCAM AMVA+ 10 LED HDMI Full HD dvi USB HUB VESA

27" 10 point multi-touch monitor with Edge to Edge glass and webcam

With 1920x1080 Full HD resolution and Projective Capacitive 10 point touch technology, the ProLite T2735MSC delivers seamless and accurate touch response. Featuring AMVA+ LED-backlit LCD screen technology, it offers exceptional colour performance and wide viewing angles, making it an excellent choice for a vast array of demanding interactive applications. Users can benefit from its hinged stand allowing the monitor to lay down completely flat for use as a giant tablet. The T2735MSC comes equipped with several video inputs and a USB 3.0 HUB as well as stereo speakers delivering good quality sound. An ideal screen for Interactive Digital Signage, InStore Retail, Gaming and Interactive Presentations purposes.

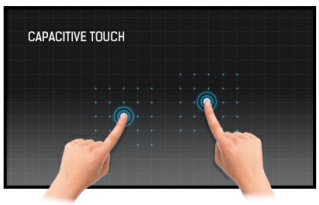

Touch technology - Capacitive

This technology uses a sensor-grid of micro-fine wires integrated into the glass that covers the screen. Touch is detected because electrical characteristics of the sensor grid change when human finger is placed on the glass. Thanks to the glass overlay this technology is highly durable, and the touch function remains unaffected even if the glass is scratched. It offers perfect picture performance and will work with human finger (also latex gloved) and stylus-pen.

Webcam and microphone

The built-in webcam and microphone make this monitor a complete solution for online communication.
Moreover you can use the touchscreen during a call to easily control your presentation and add annotations.

01 DISPLAY CHARACTERISTICS

Design	Edge to edge glass
Diagonal	27", 68.6cm
Panel	AMVA+ LED
Native resolution	1920 x 1080 (2.1 megapixel Full HD)
Aspect ratio	16:9
Panel brightness	300 cd/m²
Brightness	255 cd/m² with touch
Light transmittance	85%
Static contrast	3 000:1
Advanced contrast	12M:1
Response time (GTG)	5ms
Viewing zone	horizontal/vertical: 178°/178°, right/left: 89°/89°, up/down: 89°/89°
Colour support	16.7mln
Horizontal Sync	24 - 80kHz
Viewable area W x H	597.6 x 336.15mm, 23.5 x 13.2"
Pixel pitch	0.311mm
Bezel colour and finish	black, matte

02 TOUCH

Touch technology	projective capacitive
Touch points	10 (HID, only with supported OS)
Touch method	stylus, finger, glove (latex)
Touch interface	USB
Supported operating systems	All iiyama monitors are Plug & Play and compatible with Windows and Linux. For details regarding the supported OS for the touch models, please refer to the driver instruction file available in the downloads section.

03 INTERFACES / CONNECTORS / CONTROLS

Analog signal input	VGA x1
Digital signal input	DVI x1 HDMI x1
Audio output	Mini jack x1 Speakers 2 x 2W
USB HUB	x2 (v.3.0)

04 FEATURES

Extra	integrated webcam and microphone
OSD key lock	yes

05 GENERAL

OSD languages	EN, DE, FR, CN, RU, JP, NL, PL
Control buttons	Power, Select/ Input select, Scroll up/ Audio Adjust, Scroll down/ i-Style Colour, Menu

User controls	auto image adjust, picture adjust (contrast, brightness, ACR, ECO, OD), input select, auto adjust (volume, mute, HDMI audio), color adjust, information, manual image adjust (H./V. position, clock, phase, sharpness, video mode adjust, blue light reducer), setup menu (language select, OSD position, OSD time out, OSD background, opening logo, LED), memory recall
Convenience	Kensington-lock™ prepared
Blue light reducer	yes
Plug&Play	DDC2B

06 MECHANICAL

Tilt angle	15° up; 70° down
VESA mounting	100 x 100mm

07 ACCESSORIES INCLUDED

Cables	power, DVI, USB, Audio
Guides	quick start guide, safety guide

08 POWER MANAGEMENT

Power supply unit	internal
Power supply	AC 100 - 240V, 50/60Hz
Power usage	36W typical, 0.5W stand by, 0.5W off mode

09 SUSTAINABILITY

Regulations	CE, TÜV-Bauart, VCCI-B, PSE, RoHS support, ErP, WEEE, CU, REACH
EPEAT Silver	EPEAT is a comprehensive environmental rating that helps identify greener computers and other electronic equipment. The Silver certification means the monitor meets all required criteria plus at least 50% of the optional requirements. EPEAT Silver is valid in countries where iiyama registers the product. Please visit www.epeat.net for the registration status in your country.
REACH SVHC	above 0.1%: Lead

10 DIMENSIONS / WEIGHT

Product dimensions W x H x D	672.5 x 419 x 50mm
Weight (without box)	8.2kg
EAN code	4948570114115

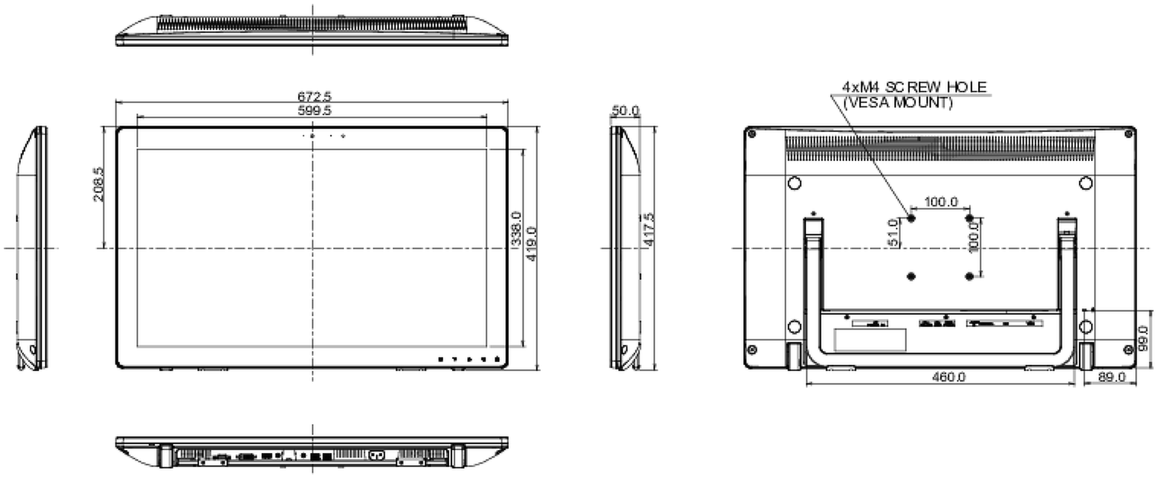

All trademarks and registered trademarks acknowledged. E & O E. Specification subject to change without notice. All LCD's comply with ISO-9241-307:2008 in connection with pixel defects.

© IIYAMA CORPORATION. ALL RIGHTS RESERVED