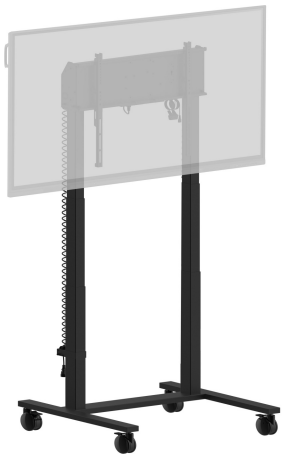

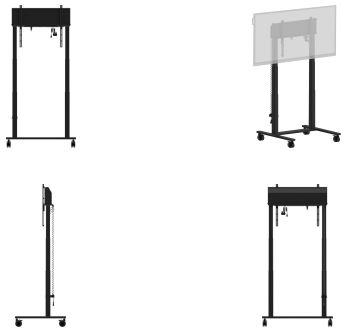

Double column electric floor lift on wheels for monitors up to 98"

An anti-collision electric trolley for large format displays up to VESA 800x600mm. This product is unique because of its screen flexibility and installation ease, within just five steps the product is installed and ready for use in any meeting area.

This mobile stand with electrical 950mm height adjustment provides a continuous and silent adjustment, controlled directly from a compatible iiyama TE SERIES display or with the attached control pad. The 4-inch muting castor omni directional wheels make it easy and save to move the car around. The integrated screen bracket supports most VESA patterns, making this floor lift suitable for every display up to 98” with a max. weight of 120kg.

*To mount a 105" display you need the additional mounting kit MD-ADAP001

01 TECHNIKAI PARAMÉTEREK

Típus	Black, 1.8m
Képernyők száma	1
Képernyő mérete	55" - 105"
Magasság beállítása	950mm, Centre of the screen is 850 - 1800mm
Maximális teherbírás	120kg / monitor
VESA maximum	800 x 600mm
Extra	For screens up to 98" (105" needs additional mounting kit - MD-ADAP001), cable management, customized cables (Power, USB, Control pad)

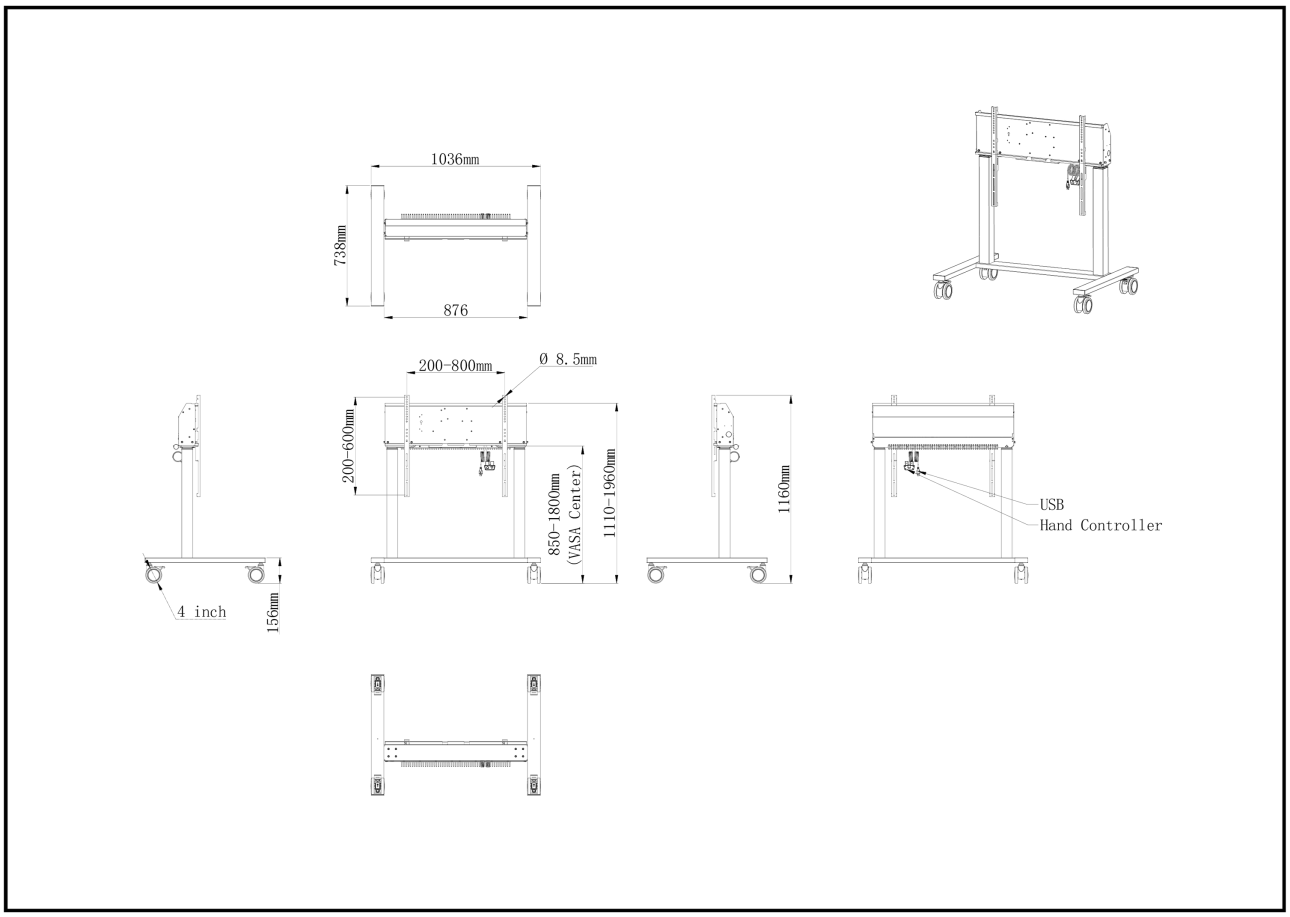

02 MÉRETEK / SÚLY

Termék méretei Sz x H x M	1036 x 850 to 1800 x 738mm
Doboz mértei Sz x H x M	1132 x 182 x 754mm
Súly (doboz nélkül)	40.9kg
Súly (dobozzal)	43.5kg
EAN kód	4948570033270

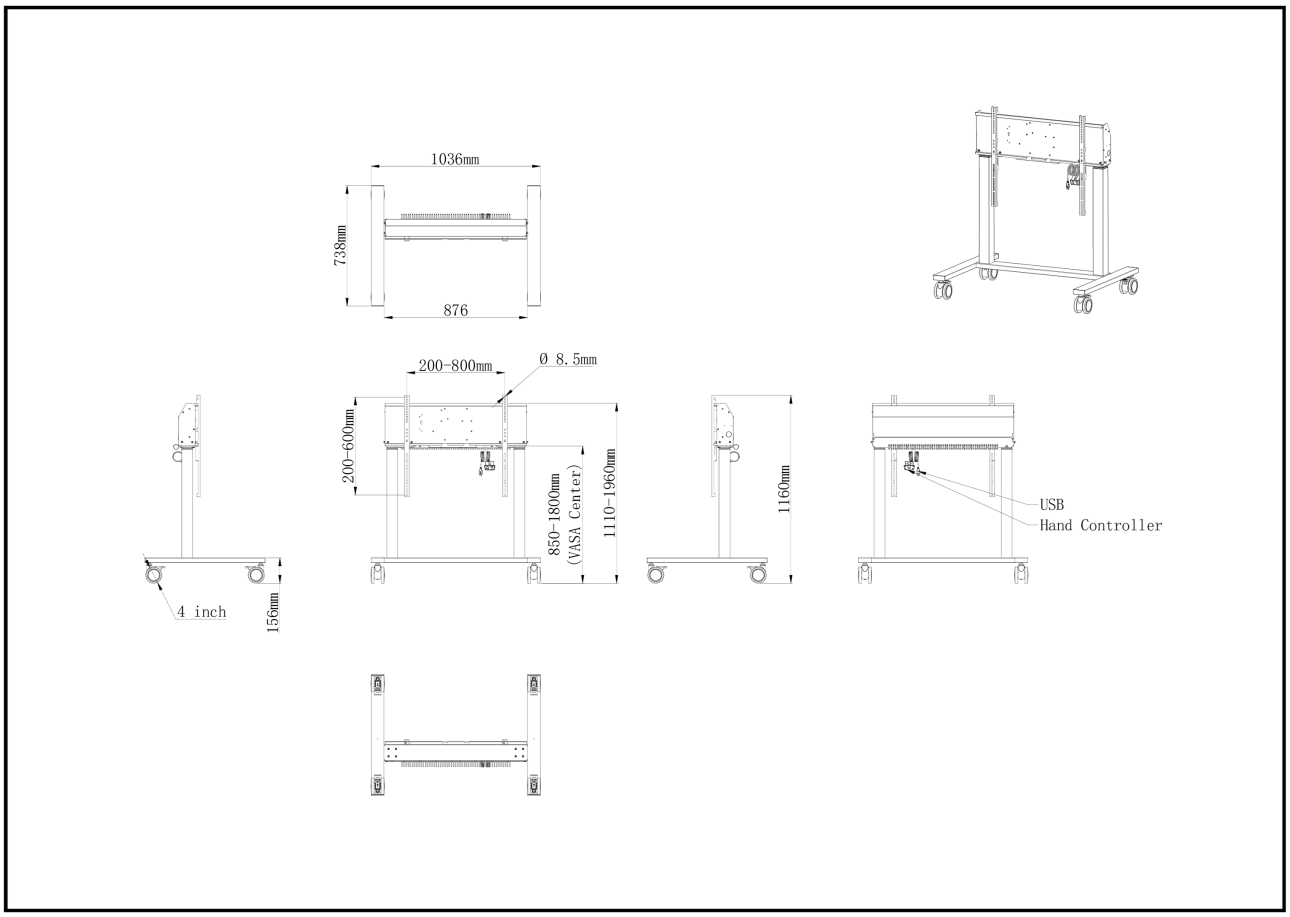

03 KAPCSOLÓDÓ INFORMÁCIÓK

Kapcsolódó termékek	MD CAR2011-B1

All trademarks and registered trademarks acknowledged. E & O E. Specification subject to change without notice. All LCD's comply with ISO-9241-307:2008 in connection with pixel defects.

© IIYAMA CORPORATION. ALL RIGHTS RESERVED