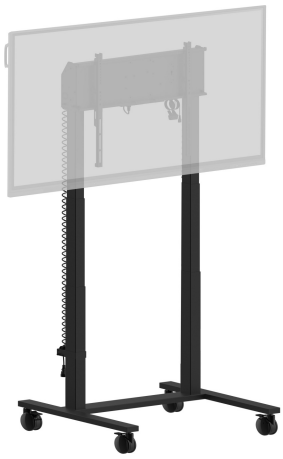

Double column electric floor lift on wheels for monitors up to 98"

An anti-collision electric trolley for large format displays up to VESA 800x600mm. This product is unique because of its screen flexibility and installation ease, within just five steps the product is installed and ready for use in any meeting area.

This mobile stand with electrical 950mm height adjustment provides a continuous and silent adjustment, controlled directly from a compatible iiyama TE SERIES display or with the attached control pad. The 4-inch muting castor omni directional wheels make it easy and save to move the car around. The integrated screen bracket supports most VESA patterns, making this floor lift suitable for every display up to 98” with a max. weight of 120kg.

*To mount a 105" display you need the additional mounting kit MD-ADAP001

01 SPECIFIKACE

Type	Black, 1.8m
Number of screens	1
Screen size	55" - 105"
Height adjustment	950mm, Centre of the screen is 850 - 1800mm
Váha max.	120kg / monitor
VESA maximum	800 x 600mm
Extra	For screens up to 98" (105" needs additional mounting kit - MD-ADAP001), cable management, customized cables (Power, USB, Control pad)

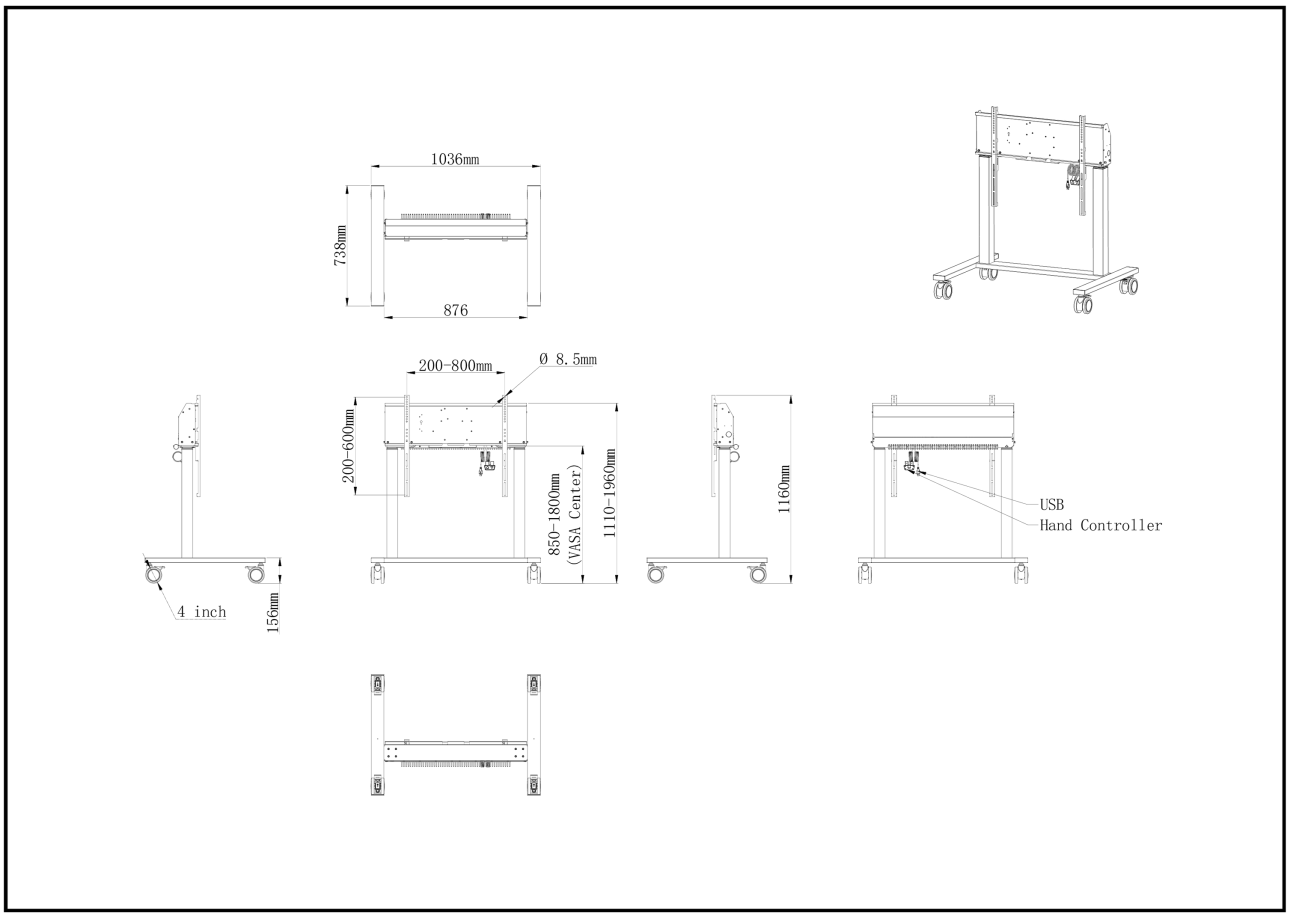

02 ROZMĚRY / HMOTNOST

Rozměry výrobku Š x V x D	1036 x 850 to 1800 x 738mm
Rozměry balení Š x V x D	1132 x 182 x 754mm
Váha (bez balení)	40.9kg
Váha (s balením)	43.5kg
EAN code	4948570033270

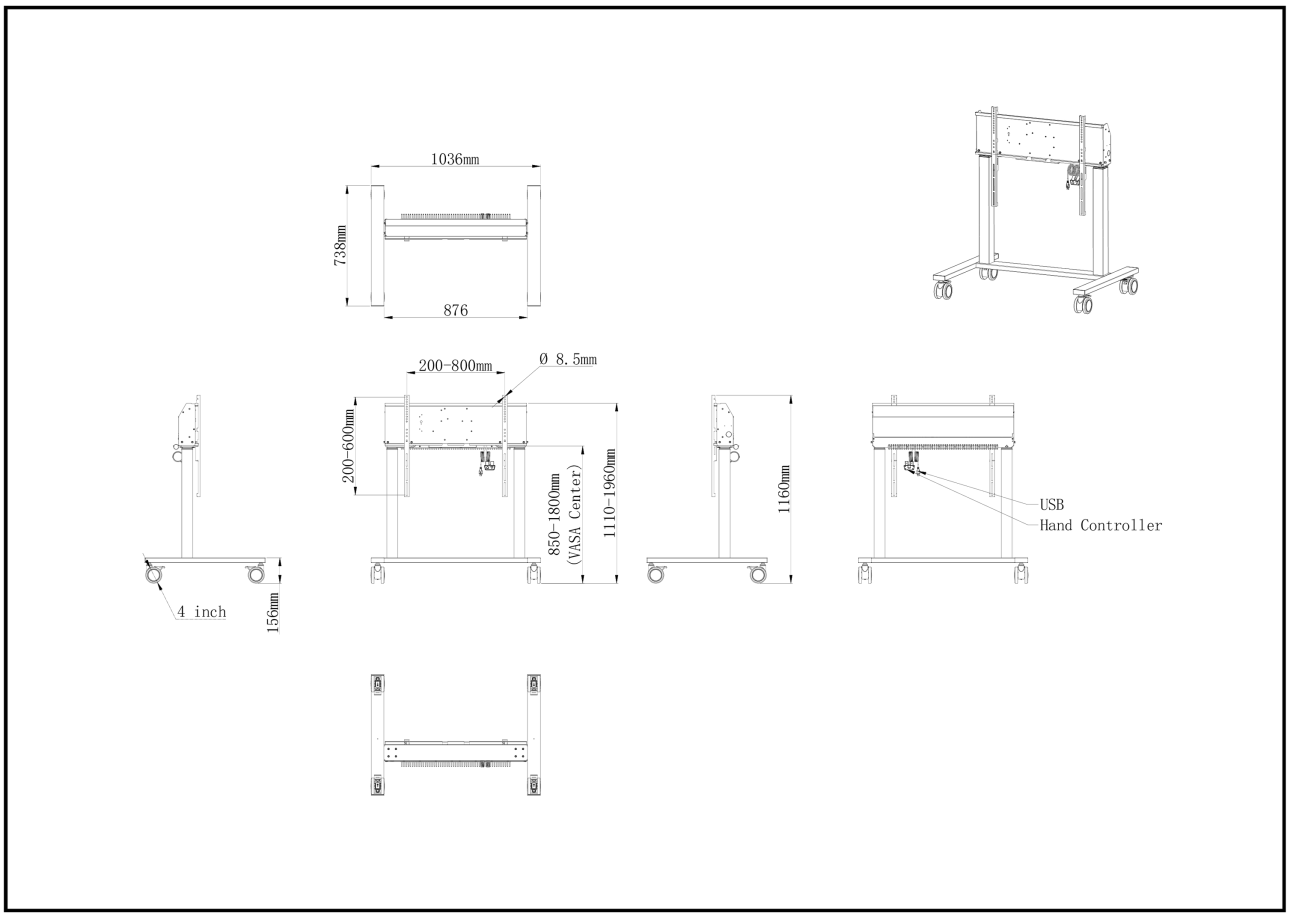

03 SOUVÍSEJÍCÍ INFORMACE

Související produkty	MD CAR2011-B1

Všechny ochranné známky jsou registrovány a chráněny. Vyhrazené právo na změny. Veškeré ploché panely LCD splňují normu ISO-9241-307:2008 v oblasti počtu vadných pixelů.

© IIYAMA CORPORATION. ALL RIGHTS RESERVED