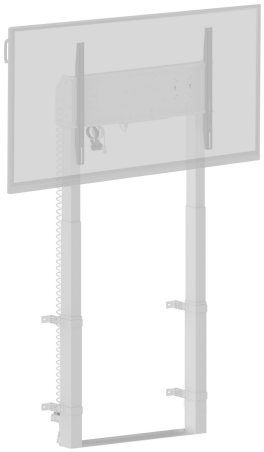

Single column electric floor lift for monitors up to 98"

This fixed on-floor and wall single-column electric lift stand is a perfect solution for 55"-98" displays. It’s suitable with screens up to VESA 800x600mm and up to 120kg. Equipped with an easy mount, based on “pull and release” brackets and a wired remote, it is a perfect solution for displays placed in classrooms or conference rooms.

This column is a perfect match for the iiyama TE12, TE14 and TE18 SERIES IFP - Interactive Displays allowing users to control the height from the screen itself. With the option to save 2 height level pre-sets, different users can quickly adjust the screen position to their needs.

*To mount a 105" display you need the additional mounting kit MD-ADAP001

01 TECHNIKAI PARAMÉTEREK

Típus	White, 1.8m
Képernyők száma	1
Képernyő mérete	55" - 105"
Magasság beállítása	950mm, Centre of the screen is 812 - 1762mm
Maximális teherbírás	120kg / monitor
VESA maximum	800 x 600mm
Extra	For screens up to 98" (105" needs additional mounting kit - MD-ADAP001), cable management, customized cables (Power, USB, Control pad)

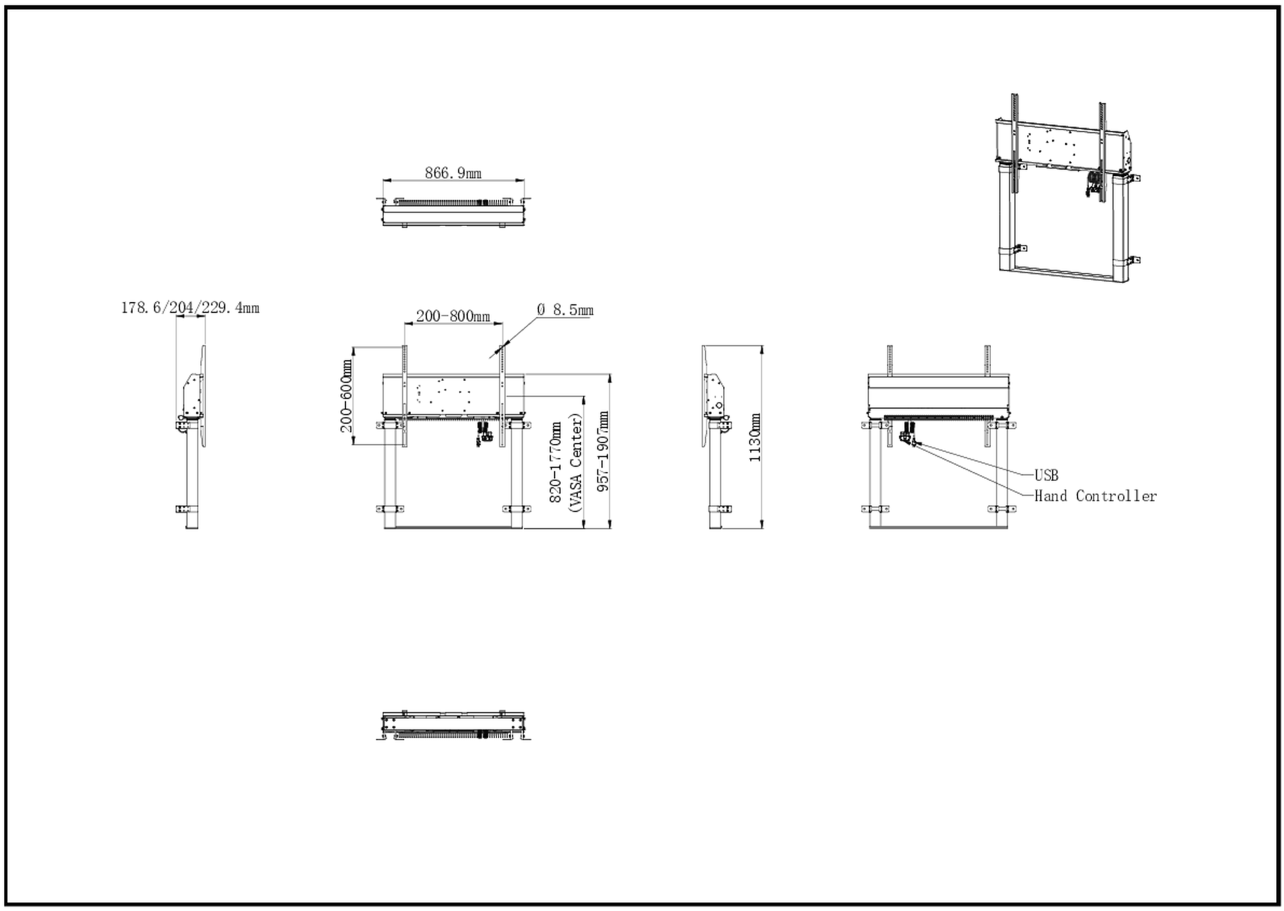

02 MÉRETEK / SÚLY

Termék méretei Sz x H x M	886.9 x 1770 x 178.6229.4mm
Doboz mértei Sz x H x M	1132 x 182 x 754mm
Súly (doboz nélkül)	35.4kg
Súly (dobozzal)	38kg
EAN kód	4948570033263

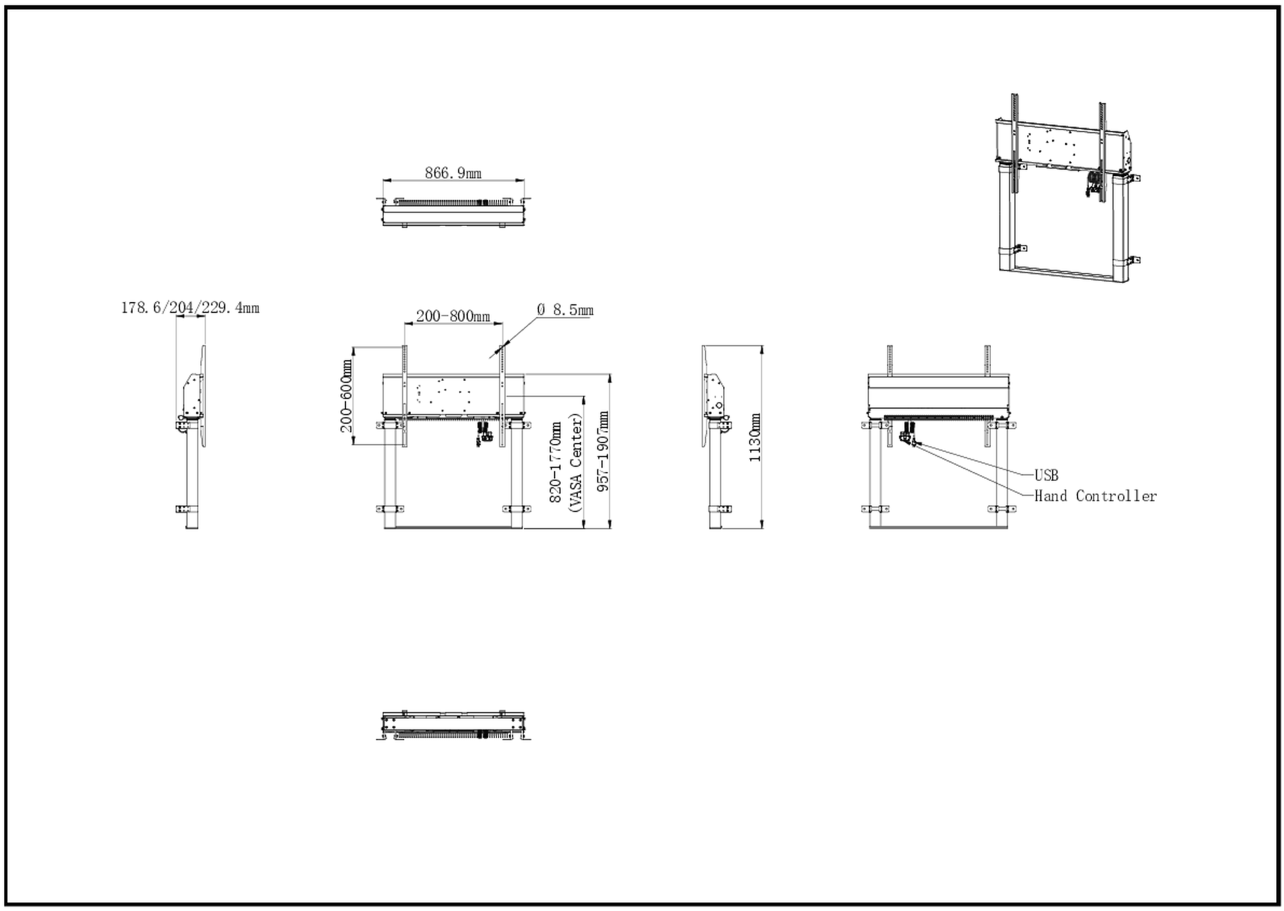

03 KAPCSOLÓDÓ INFORMÁCIÓK

Kapcsolódó termékek	MD WLIFT1021-B1

All trademarks and registered trademarks acknowledged. E & O E. Specification subject to change without notice. All LCD's comply with ISO-9241-307:2008 in connection with pixel defects.

© IIYAMA CORPORATION. ALL RIGHTS RESERVED