21.5" Full HD PCAP 10pt interactive Touch Panel PC with Android OS and edge-to-edge glass design

The ProLite TW2223AS-B1 interactive Touchpanel-PC with an elegant edge-to-edge glass design is a perfect choice for high-use environments. This monitor can operate in landscape, portrait and face-up orientation in 24/7 operating time. Thanks to the pre-installed Android 12 operating system, it is possible to easily customize the monitor by installing applications directly to it. In combination with the 16GB storage, Wi-Fi connection, LAN (RJ45) and Bluetooth connectors, it makes the monitor especially suited for POS systems or information points in retail shops to educate customers about your products, as well as virtually limitless smart home applications.

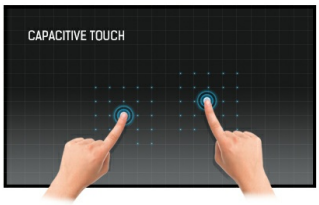

Touch technology - Capacitive

This technology uses a sensor-grid of micro-fine wires integrated into the glass that covers the screen. Touch is detected because electrical characteristics of the sensor grid change when human finger is placed on the glass. Thanks to the glass overlay this technology is highly durable, and the touch function remains unaffected even if the glass is scratched. It offers perfect picture performance and will work with human finger (also latex gloved) and stylus-pen.

Android OS

Thanks to Android OS, you can easily customize the display to your needs by installing applications directly to it.

01 DISPLAY CHARACTERISTICS

Design	Edge to edge glass
Diagonal	21.5", 54.6cm
Panel	VA
Native resolution	1920 x 1080 (2 megapixel HD)
Aspect ratio	16:9
Panel brightness	400 cd/m²
Brightness	350 cd/m² with touch
Light transmittance	85%
Static contrast	3000:1 with touch
Response time (GTG)	18ms
Viewing zone	horizontal/vertical: 178°/178°, right/left: 89°/89°, up/down: 89°/89°
Colour support	16.7mln
Horizontal Sync	30. - 84.kHz
Viewable area W x H	478 x 269.5mm, 18.8 x 11.8"
Pixel pitch	0.248mm
Bezel colour and finish	black, matte

02 TOUCH

Touch technology	projective capacitive
Touch points	10 (HID, only with supported OS)
Touch accuracy	+- 2mm
Touch method	finger, glove (latex), capacitive stylus
Touch interface	USB

03 INTERFACES / CONNECTORS / CONTROLS

Digital signal output	HDMI x1 (1920x1080 @60Hz)
Audio output	Mini jack x1 Speakers 2 x 2W
HDCP	yes
USB ports	x5 (2x 2.0 (DC5V, 500mA), 1x v. 3.2 (Gen 1, 5Gbit; DC5V, 900mA), 2x serial port (for maintenance use), 1x USB OTG)
RJ45 (LAN)	x1
Microphone	x1

04 FEATURES

Integrated software	Android 12 with GMS
CPU	Rockchip RK3399 (1.8GHz, 16Gb storage)
GPU	Dual-core A72 + Quad-core A53
Storage	16Gb eMMC
Memory	2Gb LPDDR4
WiFi	IEEE802.11a/b/g/n/ac
Bluetooth	5.2
Extra	auto-rotation, SD card slot
Max. non-stop operating time	24/7

Anti image retention	yes
Glass thickness	2.9mm
Glass hardness	6H
OSD key lock	yes

05 GENERAL

Control buttons	Power switch
Applications	Lock applications, manage restart time, manage power on/off, calculator, calender, Chrome, alarm/ clock, Timer, Stopwatch, Manage files, orginize albums, Gmail, play audio files, Play Store, search engine, system preferences, sound recorder, play videos
Flicker free	yes

06 MECHANICAL

Orientation	landscape, portrait, face-up
VESA mounting	100 x 100mm
Cable management system	yes
MTBF	50000 hours (excluding backlight)

07 ACCESSORIES INCLUDED

Cables	power
Guides	quick start guide, safety guide
Other	AC adapter
Cable cover	yes

08 POWER MANAGEMENT

Power supply unit	external
Power supply	DC 12 V
Power usage	23W typical, 0.5W stand by, 0.3W off mode

09 SUSTAINABILITY

Regulations	CE, EAC, RoHS support, ErP, WEEE, REACH, UKCA
REACH SVHC	above 0.1%: Lead

10 DIMENSIONS / WEIGHT

Product dimensions W x H x D	504.5 x 302 x 32mm
Box dimensions W x H x D	640 x 410 x 121mm
Weight (without box)	3.61kg
Weight (with box)	5.98kg
EAN code	4948570122936

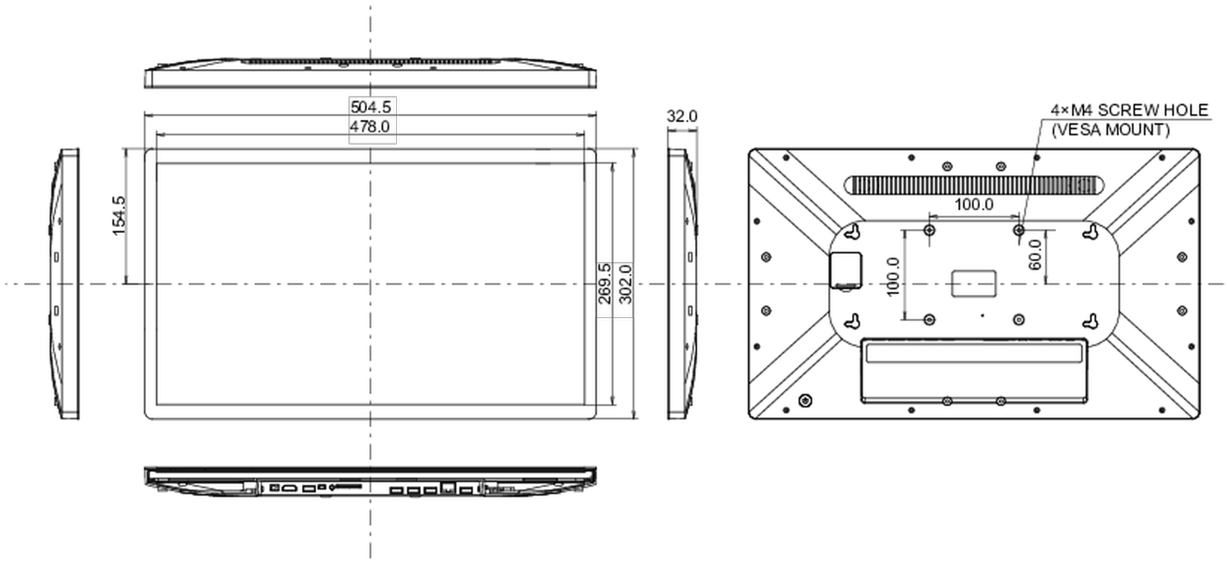

All trademarks and registered trademarks acknowledged. E & O E. Specification subject to change without notice. All LCD's comply with ISO-9241-307:2008 in connection with pixel defects.

© IIYAMA CORPORATION. ALL RIGHTS RESERVED