32'' IPS panel with KVM switch, USB-C dock and RJ45 (LAN)

Equipped with the KVM switch, the XUB3293UHSN allows you to connect multiple computers that can be operated over one console (monitor, keyboard, mouse). The USB-C dock provides a clean and practical workspace by using a single cable to both send the signal from your notebook to your monitor and power and charge the notebook from the monitor. Additionally, if your monitor is connected to the Internet with a LAN cable, your notebook will automatically be connected to the network as well. IPS panel guarantees wide viewing angles and natural, highly accurate colours.

KVM SWITCH

Having a monitor with a KVM switch allows you to share the devices connected via USB to your monitor with two different PCs. Just change the signal input in the OSD menu of the monitor and your keyboard, mouse and webcam will switch from your work laptop to your gaming PC.

USB-C Dock

The dock allows you to connect your laptop with a single cable to the monitor to both make sure it is charged and connected to a wired network and signal from the laptop is sent to the monitor. With additional USB-ports, your mouse, keyboard or webcam can also be connected to the monitor. All thanks to a single cable connecting your laptop* to the USB C dock in the monitor.
*Functions vary depending on your laptop USB-C support.

01 DISPLAY CHARACTERISTICS

Design	3-side borderless
Diagonal	31.5", 80cm
Panel	IPS Panel Technology LED, matte finish
Native resolution	3840 x 2160 @60Hz (8.3 megapixel 4K UHD)
Aspect ratio	16:9
Panel brightness	350 cd/m²
Static contrast	1000:1
Advanced contrast	80M:1
Response time (GTG)	4ms
Viewing zone	horizontal/vertical: horizontal°/vertical 178°, right/left: 0°/0°, up/down: 0°/0°
Colour support	1.07B 10bit (8bit + Hi-FRC) (sRGB: 99%; NTSC: 93%)
Horizontal Sync	30 - 135kHz
Viewable area W x H	698.1 x .392.7mm, 27.5 x 15.5"
Pixel pitch	0.182mm
Colour	matte, black

02 INTERFACES / CONNECTORS / CONTROLS

Signal input	HDMI x1 (3840 x 2160 @60Hz) DisplayPort x1 (3840 x 2160 @60Hz) USB-C x1 (Power delivery 65W)
USB HUB	x2 (v. 3.2 (Gen 1, 5Gbit; DC5V, 900mA))
USB-C DOCK	x1 (Power delivery 65W, LAN, USB v. 3.2 (Gen 1, 5Gbit))
HDCP	yes
Headphone connector	yes
RJ45 (LAN)	x1

03 FEATURES

KVM switch	yes
Blue light reducer	yes
Flicker free	yes
Extra	i-Style Colour
OSD languages	EN, DE, FR, IT, RU, JP, CZ, NL, PL
Control buttons	Power, Menu, Right / Volume, Left / Eco, Input Select / Exit
User controls	picture (brightness, contrast, black tuner, sharpness, OD, ACR, ECO, X-res technology), colour (warm, normal, cool, user colour, i-Style colour, blue light reducer), input select, audio (volume, mute), language, OSD settings (OSD H. position, OSD V. position, OSD background, OSD time out, information), setup menu (video mode adjust, HDMI RGB range, KVM, USB-C, USB BC, opening logo, LED, memory recall)
Speakers	2 x 3W
Convenience	Kensington-lock™ prepared, DDC2B

04 MECHANICAL

Display position adjustments	height, swivel, tilt
Height adjustment	150mm
Swivel stand	90°; ° left; 45° right

Tilt angle	23° up; 5° down
VESA mounting	100 x 100mm
Cable management system	yes

05 ACCESSORIES INCLUDED

Cables	power, USB, HDMI, DP, USB-C
Other	quick start guide, safety guide

06 POWER MANAGEMENT

Power supply unit	internal
Power supply	AC 100 - 240V, 50/60Hz
Power usage	33W typical, 0.5W stand by, 0.5W off mode

07 SUSTAINABILITY

Regulations	CE, TÜV-Bauart, EAC, PSE, RoHS support, ErP, WEEE, VCCI, REACH, UKCA
Energy efficiency class (Regulation (EU) 2017/1369)	G
REACH SVHC	above 0.1%: Lead

08 DIMENSIONS / WEIGHT

Product dimensions W x H x D	714 x 452 (602) x 239.5mm
Weight (without box)	9.9kg
EAN code	4948570121342

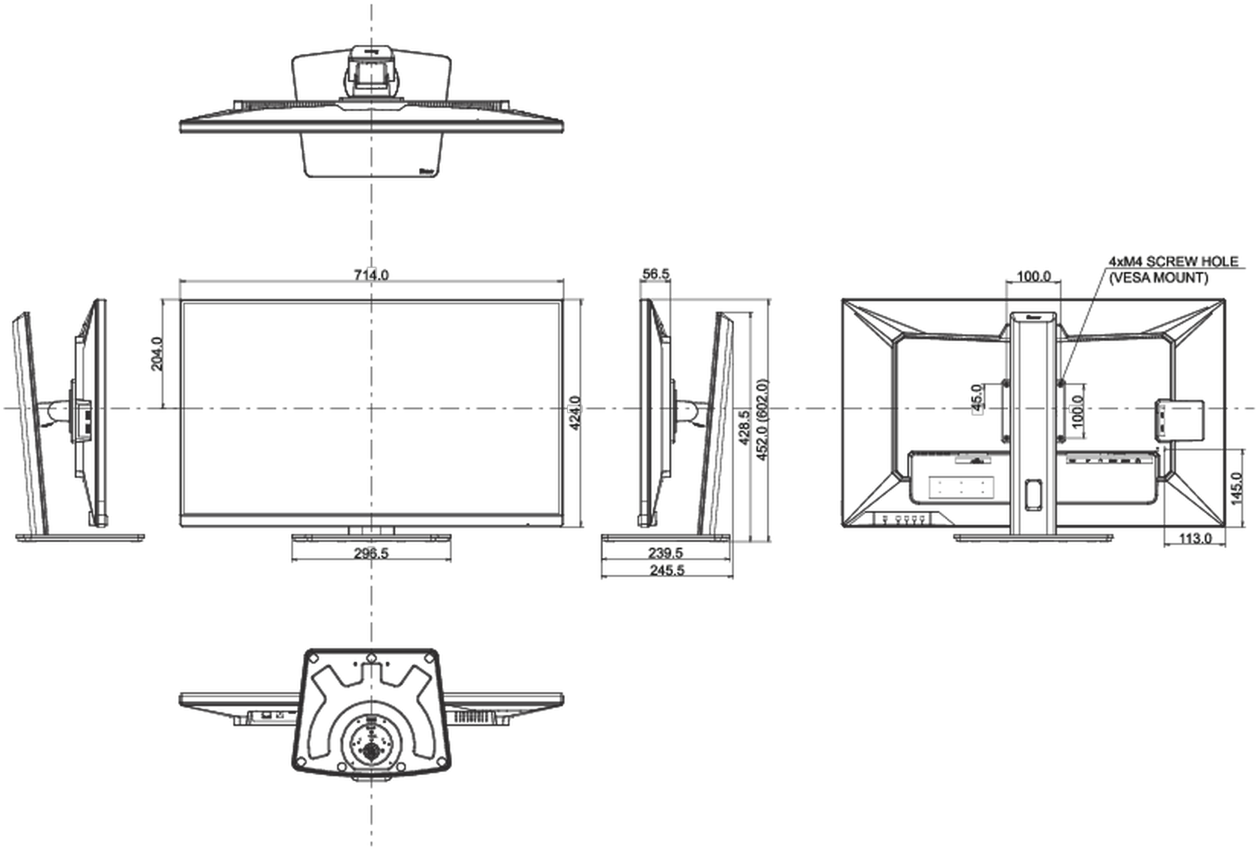

All trademarks and registered trademarks acknowledged. E & O E. Specification subject to change without notice. All LCD's comply with ISO-9241-307:2008 in connection with pixel defects.

© IIYAMA CORPORATION. ALL RIGHTS RESERVED