32" VA panel with 4K resolution

The ProLite XB3288UHSU is a 32" 4K monitor capable of displaying 4 times more information than a Full HD screen. It will hence suit a massive range of applications requiring an above average viewable area, like desktop publishing, CAD/CAM drawing, data virtualization, photographic and web design. The VA panel technology offers exceptional colour performance, high contrast and wide viewing angles. HDMI, DisplayPort and a headphone socket ensure compatibility across various devices and media platforms. The 150mm height-adjustable stand featuring pivot and swivel functions deliver great versatility and comfort of use.

4K

UHD resolution (3840x2160), better known as 4K, offers a gigantic viewable area with 4 times more information and work space than a Full HD screen. Due to the high DPI (dots per inch), it displays an incredibly sharp and crisp image.

VA

VA panel technology offers higher contrast, darker blacks and much better viewing angles than standard TN technology. The screen will look good no matter what angle you look at it.

01 DISPLAY CHARACTERISTICS

Diagonal	31.5", 80cm
Panel	VA, matte finish
Native resolution	3840 x 2160 @60Hz (8.3 megapixel 4K UHD)
Aspect ratio	16:9
Panel brightness	300 cd/m²
Static contrast	3000:1
Advanced contrast	80M:1
Response time (GTG)	3ms
Viewing zone	horizontal/vertical: 178°/178°, right/left: 89°/89°, up/down: 89°/89°
Colour support	1.07B 10bit (NTSC: 95%)
Horizontal Sync	30 - 135kHz
Viewable area W x H	698.4 x 392.9mm, 27.5 x 15.5"
Pixel pitch	0.181mm
Colour	matte, black

02 INTERFACES / CONNECTORS / CONTROLS

Signal input	HDMI x2 (v. 2.0) DisplayPort x1 (v. 1.2)
USB HUB	x2 (v. 3.2 (Gen 1, 5Gbit; DC5V, 900mA))
HDCP	yes
Headphone connector	yes

03 FEATURES

Blue light reducer	yes
Flicker free	yes
Adaptive Sync support	@38~60Hz
HDR	yes
OSD languages	EN, DE, FR, IT, RU, JP, CZ, NL, PL
Control buttons	Joystick: Power/Menu, Up/Input select, Down, Left/Eco Mode, Right/Volume
User controls	picture (brightness, contrast, black tuner, sharpness, OD, ACR, Eco, X-Res Technology), colour (warm, normal, cool, user colour, i-Style colour, blue light reducer), input select, audio (volume, mute), PiP/PbP (mode, sub win input, PiP size, PiP position, swap, audio input), language , OSD settings (OSD H. position, OSD V. position, OSD background, OSD time out, information), setup menu (video mode adjust, HDMI RGB range, HDR, FreeSync, USB BC, opening logo, LED, memory recall)
Speakers	2 x 3W
Convenience	Kensington-lock™ prepared, DDC/CI, Mac OSX

04 MECHANICAL

Display position adjustments	height, swivel, tilt
Height adjustment	150mm
Swivel stand	90°; 45° left; 45° right
Tilt angle	23° up; 35° down
VESA mounting	100 x 100mm
Cable management system	yes

05 ACCESSORIES INCLUDED

Cables	power, USB, HDMI, DP
Other	quick start guide, safety guide

06 POWER MANAGEMENT

Power supply unit	internal
Power supply	AC 100 - 240V, 50/60Hz
Power usage	44W typical, 0.5W stand by, 0.5W off mode

07 SUSTAINABILITY

Regulations	CE, TÜV-Bauart, EAC, VCCI-B, PSE, RoHS support, ErP, WEEE, REACH, UKCA
Energy efficiency class (Regulation (EU) 2017/1369)	G
REACH SVHC	above 0.1%: Lead

08 DIMENSIONS / WEIGHT

Product dimensions W x H x D	730 x 455.5 (605.5) x 239.5mm
Weight (without box)	8.8kg
EAN code	4948570121335

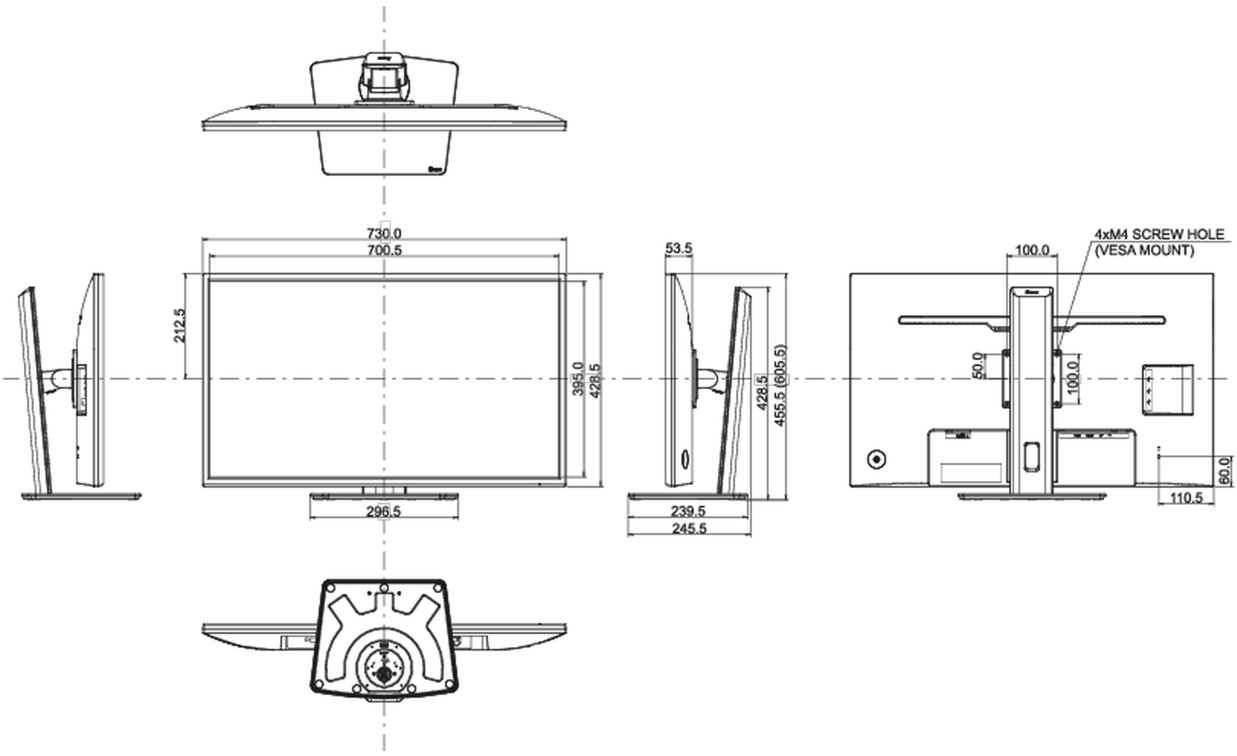

All trademarks and registered trademarks acknowledged. E & O E. Specification subject to change without notice. All LCD's comply with ISO-9241-307:2008 in connection with pixel defects.

© IIYAMA CORPORATION. ALL RIGHTS RESERVED