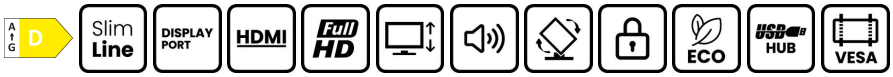

22" Full HD monitor with VA panel and a height adjustable stand

The ProLite XUB2294HSU featuring VA panel technology guarantees accurate and consistent colour reproduction with wide viewing angles. Input configuration including HDMI, DisplayPort and a USB hub assure compatibility with many platforms. The 150mm ergonomic height adjustable stand with pivot function allows you to easily adjust the monitor position to your preferences making it a solid solution for both home and the office.

VA

VA panel technology offers higher contrast, darker blacks and much better viewing angles than standard TN technology. The screen will look good no matter what angle you look at it.

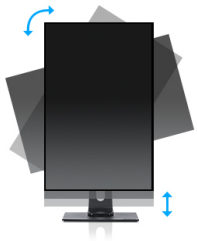

HAS (150mm) + Pivot (rotation both sides)

With a height adjustable stand you will create an ergonomic work posture and position that meets all health and safety requirements. This will not only prevent any health issues but will also increase your productivity. The pivot function allows the screen to rotate from landscape to portrait orientation. This functionality can be useful if the application requires more height than width.

01 DISPLAY CHARACTERISTICS

Design	3-side borderless
Diagonal	21.5", 54.5cm
Panel	VA, matte finish
Native resolution	1920 x 1080 @75Hz (2.1 megapixel Full HD)
Aspect ratio	16:9
Panel brightness	250 cd/m²
Static contrast	3000:1
Advanced contrast	80M:1
Response time (MPRT)	1ms
Viewing zone	horizontal/vertical: 178°/178°, right/left: 89°/89°, up/down: 89°/89°
Colour support	16.7mln (sRGB: 99%; NTSC: 72%)
Horizontal Sync	30 - 85kHz
Viewable area W x H	478.7 x 260.3mm, 18.8 x 10.2"
Pixel pitch	0.249mm
Colour	matte, white

02 INTERFACES / CONNECTORS / CONTROLS

Signal input	HDMI x1 DisplayPort x1
USB HUB	x2 (v. 3.2 (Gen 1, 5Gbit; DC5V, 900mA))
HDCP	yes
Headphone connector	yes

03 FEATURES

Blue light reducer	yes
Flicker free	yes
Adaptive Sync support	yes
Extra	i-Style colour
OSD languages	EN, DE, FR, ES, IT, RU, JP, CZ, NL, PL
Control buttons	Joystick Controller/ Power Button : Forward (i-Style Colour/Blue Light Reducer), Backward (Select Input Source), Left (Eco), Right (Volume)
User controls	picture adjust (brightness, contrast, Eco, Blue Light Reducer, ACR, OD, MBR), colour settings (colour temp., user preset, i-Style colour), OSD (OSD H. position, OSD V. position, OSD rotate, OSD time), language, recall, miscellaneous (sharp and soft, video mode adjust, opening logo, AMD FreeSync, RGB range, display information), input select (input source), audio settings (volume, mute)
Speakers	2 x 2W
Convenience	Kensington-lock™ prepared, DDC2B, Mac OSX

04 MECHANICAL

Display position adjustments	height, swivel, tilt, pivot (rotation both sides)
Height adjustment	150mm
Rotation (PIVOT function)	90°
Swivel stand	90°; 45° left; 45° right
Tilt angle	23° up; 5° down
VESA mounting	100 x 100mm

Cable management system	yes

05 ACCESSORIES INCLUDED

Cables	power, USB, HDMI
Other	quick start guide, safety guide

06 POWER MANAGEMENT

Power supply unit	internal
Power supply	AC 100 - 240V, 50/60Hz
Power usage	13W typical, 0.5W stand by, 0.3W off mode

07 SUSTAINABILITY

Regulations	CE, TÜV-Bauart, VCCI-B, PSE, RoHS support, ErP, WEEE, REACH, UKCA
Energy efficiency class (Regulation (EU) 2017/1369)	D
REACH SVHC	above 0.1%: Lead

08 DIMENSIONS / WEIGHT

Product dimensions W x H x D	493.5 x 326.5 (476.5) x 209.5mm
Box dimensions W x H x D	615 x 125 x 400mm
Weight (without box)	4.2kg
Weight (with box)	5.0kg
EAN code	4948570121946

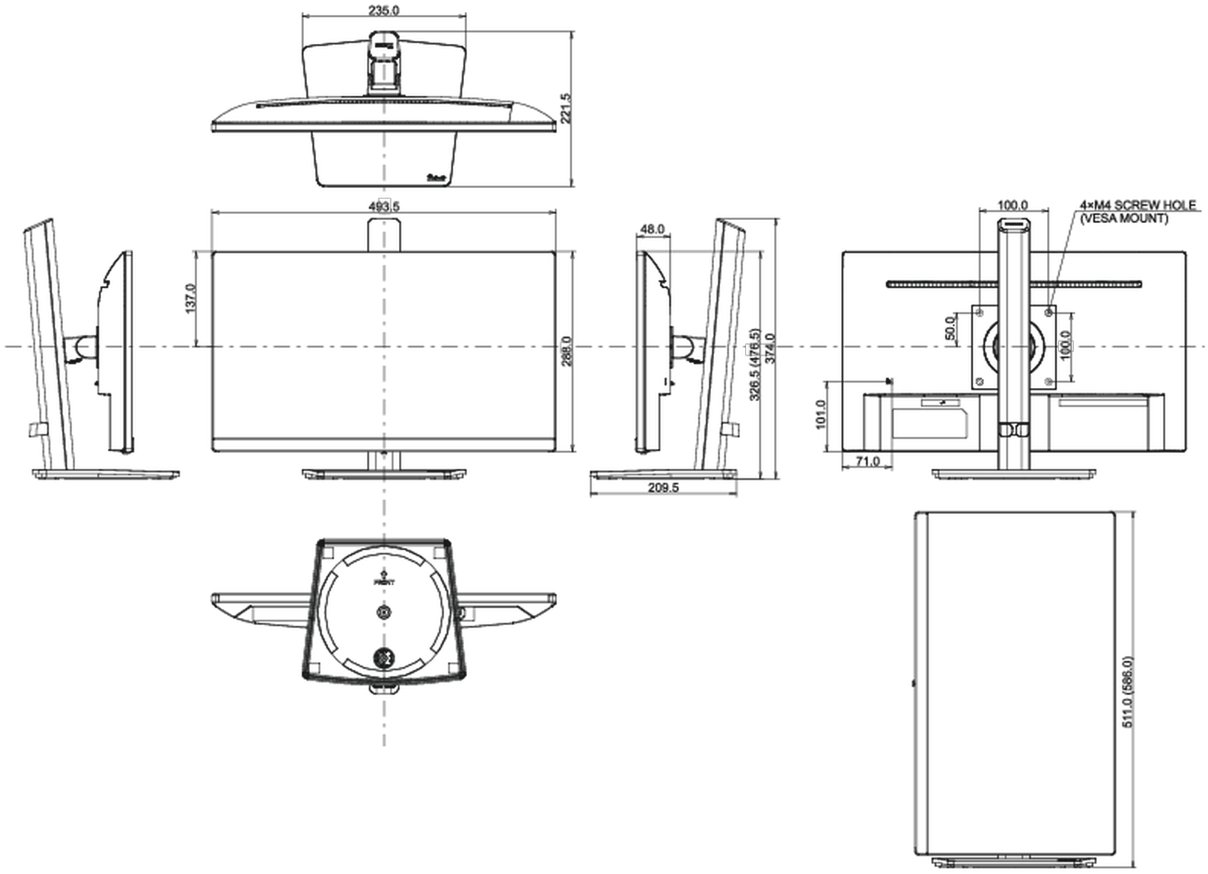

All trademarks and registered trademarks acknowledged. E & O E. Specification subject to change without notice. All LCD's comply with ISO-9241-307:2008 in connection with pixel defects.

© IIYAMA CORPORATION. ALL RIGHTS RESERVED