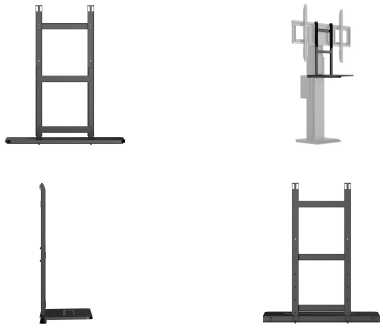

Laptop shelf

This laptop shelf is an optional accessory compatible with the MD WLIFT1021-B1. Can be used to place a laptop in front of a large format display on a lift stand. It can support a computer with a maximum weight of up to 10kg.

01 TECHNICAL SPECIFICATION

Max weight capacity	10kg / monitor

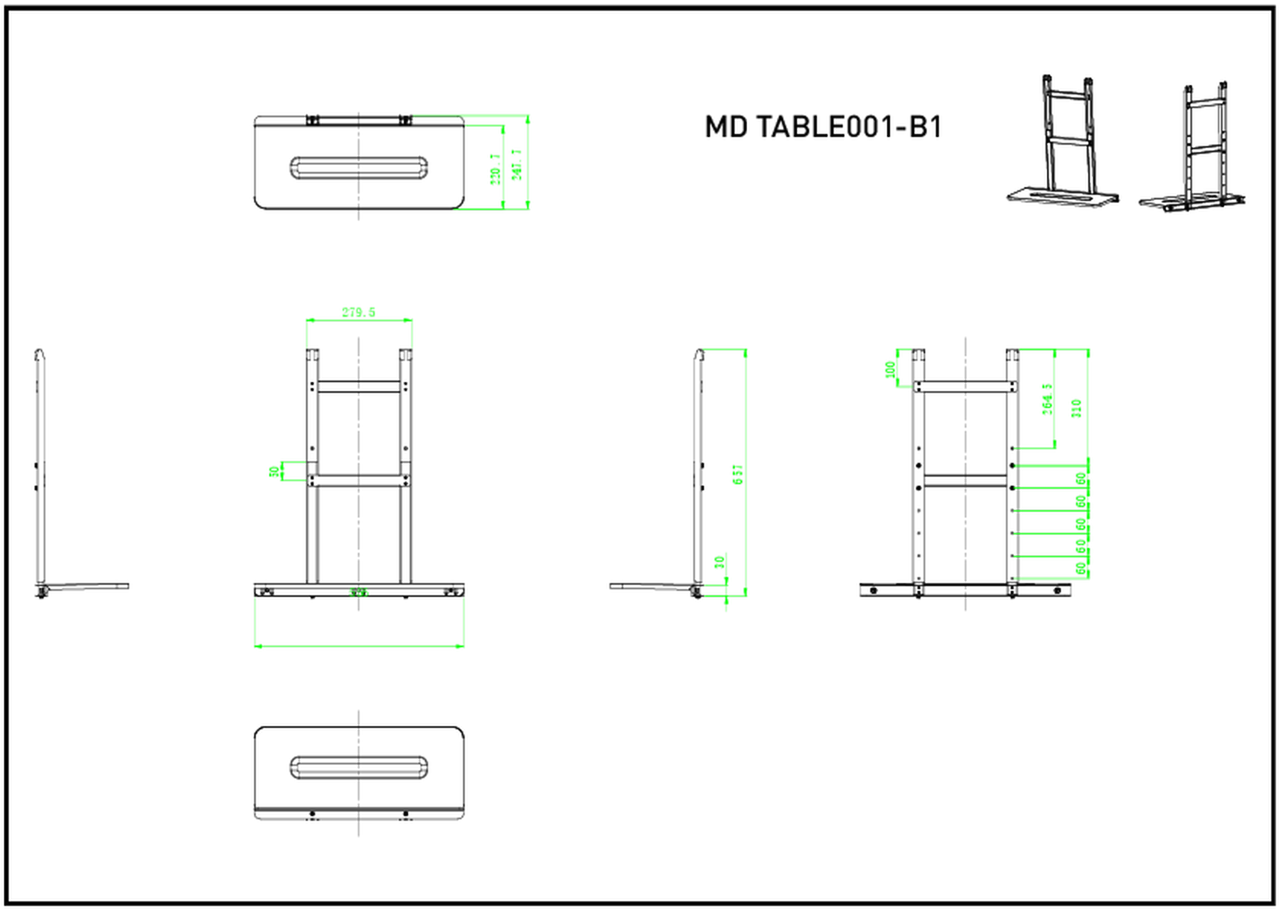

02 DIMENSIONS / WEIGHT

Product dimensions W x H x D	556 x 657 x 247.7mm
EAN code	4948570033119

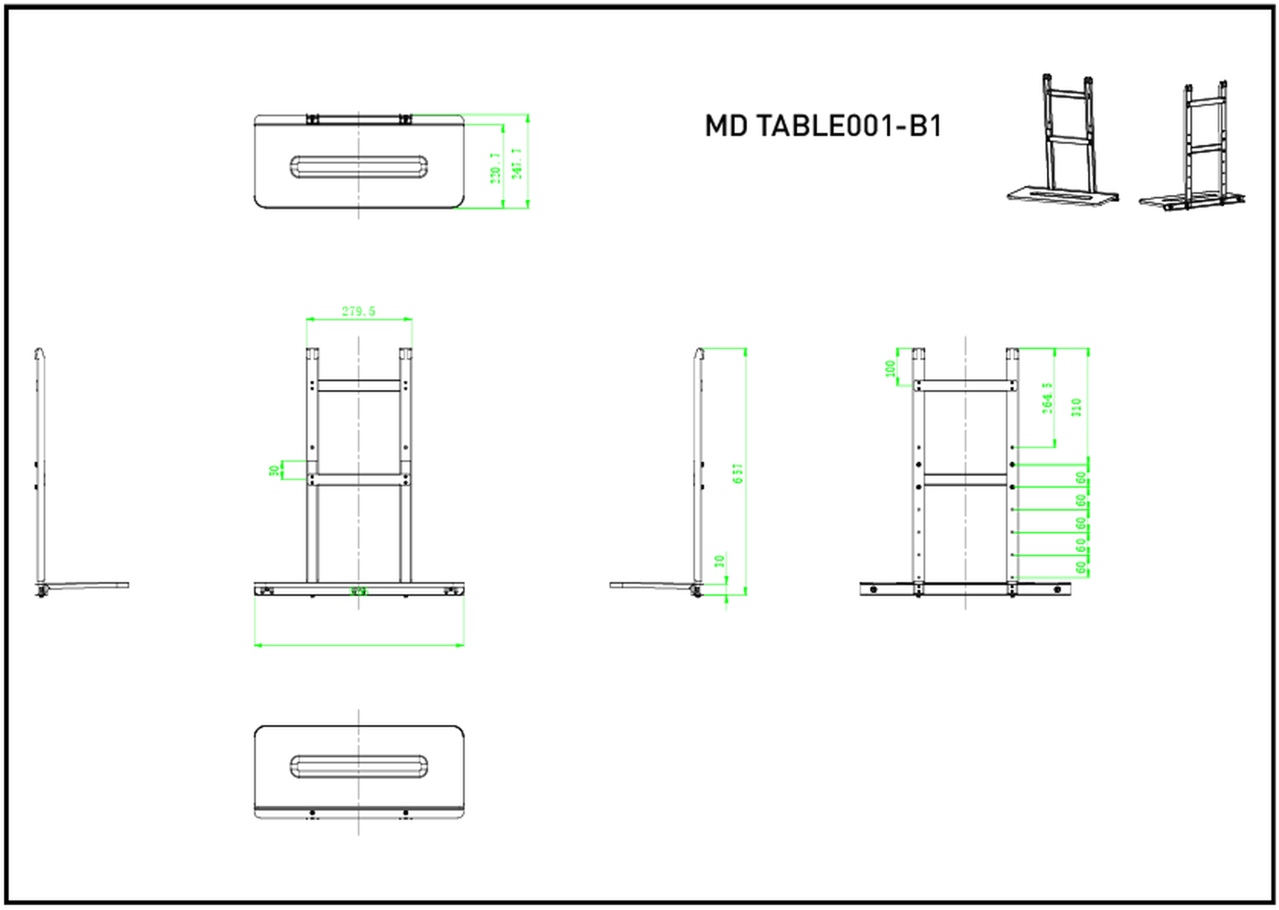

03 RELATED INFORMATION

Related products	MD WLIFT1021-B1

All trademarks and registered trademarks acknowledged. E & O E. Specification subject to change without notice. All LCD's comply with ISO-9241-307:2008 in connection with pixel defects.

© IIYAMA CORPORATION. ALL RIGHTS RESERVED