FLICKER FREE LED | DISPLAY PORT | HDMI | Full HD | ECO | USB HUB | VESA

24" Full HD monitor with USB hub

The ProLite X2483HSU-B5 is a 23.8" screen featuring a VA panel which guarantees accurate and consistent colour reproduction with wide viewing angles. This monitor is equipped with speakers, 2-port USB hub, headphone socket, HDMI and DisplayPort connections and a blue light reducer function to reduce eye fatigue. The display is TCO certified. A perfect solution for education, local government, business and finance markets.

VA

VA panel technology offers higher contrast, darker blacks and much better viewing angles than standard TN technology. The screen will look good no matter what angle you look at it.

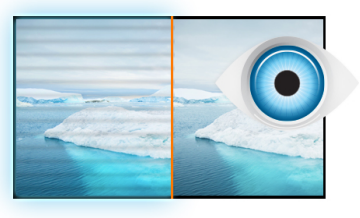

Flicker-free + Blue light

The ultimate solution for the comfort and health of your eyes. Flicker-free monitors with the blue light reducer function substantially reduce the strain and fatigue caused by flickering and blue light emittance of regular monitors.

01 DISPLAY CHARACTERISTICS

Diagonal	23.8", 60.5cm
Panel	VA LED, matte finish
Native resolution	1920 x 1080 @75Hz (2.1 megapixel Full HD)
Aspect ratio	16:9
Panel brightness	250 cd/m²
Static contrast	3 000:1
Advanced contrast	80M:1
Response time (GTG)	4ms
Viewing zone	horizontal/vertical: 178°/178°, right/left: 89°/89°, up/down: 89°/89°
Colour support	16.7mln (sRGB: 99%; NTSC: 72%)
Horizontal Sync	30 - 80kHz
Viewable area W x H	527 x 296.5mm, 20.7 x 11.7"
Pixel pitch	0.275mm
Colour	matte, black

02 INTERFACES / CONNECTORS / CONTROLS

Signal input	HDMI x1 DisplayPort x1
USB HUB	x2 (v.2.0 (DC5V, 500mA))
HDCP	yes
Headphone connector	yes

03 FEATURES

Blue light reducer	yes
Flicker free	yes
Extra	i-Style colour
OSD languages	EN, DE, FR, ES, IT, RU, JP, CZ, NL, PL
Control buttons	Power, Menu/ Select, Scroll up/ Volume, Scroll down/ ECO, Exit, Input Select
User controls	picture adjust (brightness, contrast, Eco, blue light reducer, ACR, OD), colour settings (colour temp., user preset, i-Style colour), OSD (OSD H. position, OSD V. position, OSD rotate, OSD time), language, recall, miscellaneous (sharp and soft, video mode adjust, opening logo, RGB range, information), input source
Speakers	2 x 2W
Convenience	Kensington-lock™ prepared, DDC2B, Mac OSX

04 MECHANICAL

Display position adjustments	tilt
Tilt angle	23° up; 5° down
VESA mounting	100 x 100mm

05 ACCESSORIES INCLUDED

Cables	power, USB, HDMI
Other	quick start guide, safety guide

06 POWER MANAGEMENT

Power supply unit	internal
Power supply	AC 100 - 240V, 50/60Hz
Power usage	18W typical, 0.5W stand by, 0.3W off mode

07 SUSTAINABILITY

Regulations	TCO Certified, CE, TÜV-GS, EAC, VCCI-B, RoHS support, ErP, WEEE, REACH, UKCA
TCO Certified	X2483HSU-B5 H
Energy efficiency class (Regulation (EU) 2017/1369)	E
REACH SVHC	above 0.1%: Lead

08 DIMENSIONS / WEIGHT

Product dimensions W x H x D	552.5 x 406.5 x 232mm
Box dimensions W x H x D	622 x 120 x 410mm
Weight (without box)	3.9kg
Weight (with box)	5.0kg
EAN code	4948570121557

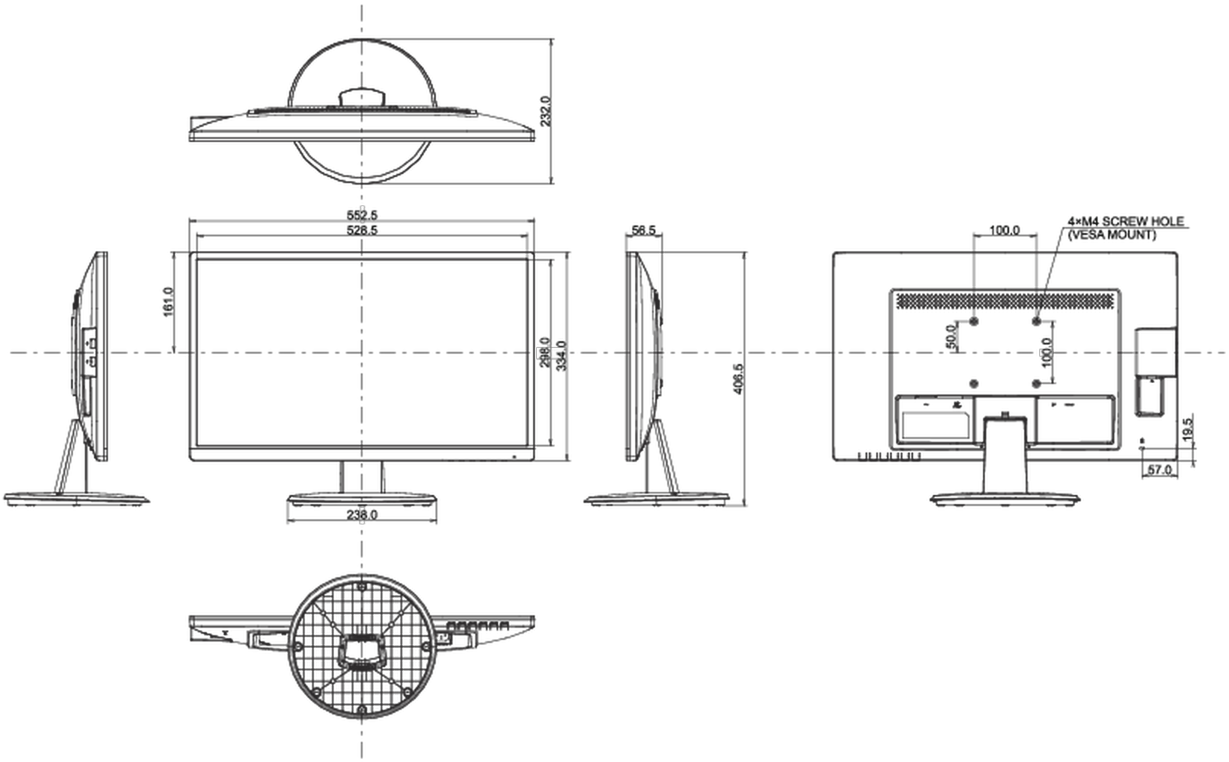

All trademarks and registered trademarks acknowledged. E & O E. Specification subject to change without notice. All LCD's comply with ISO-9241-307:2008 in connection with pixel defects.

© IIYAMA CORPORATION. ALL RIGHTS RESERVED