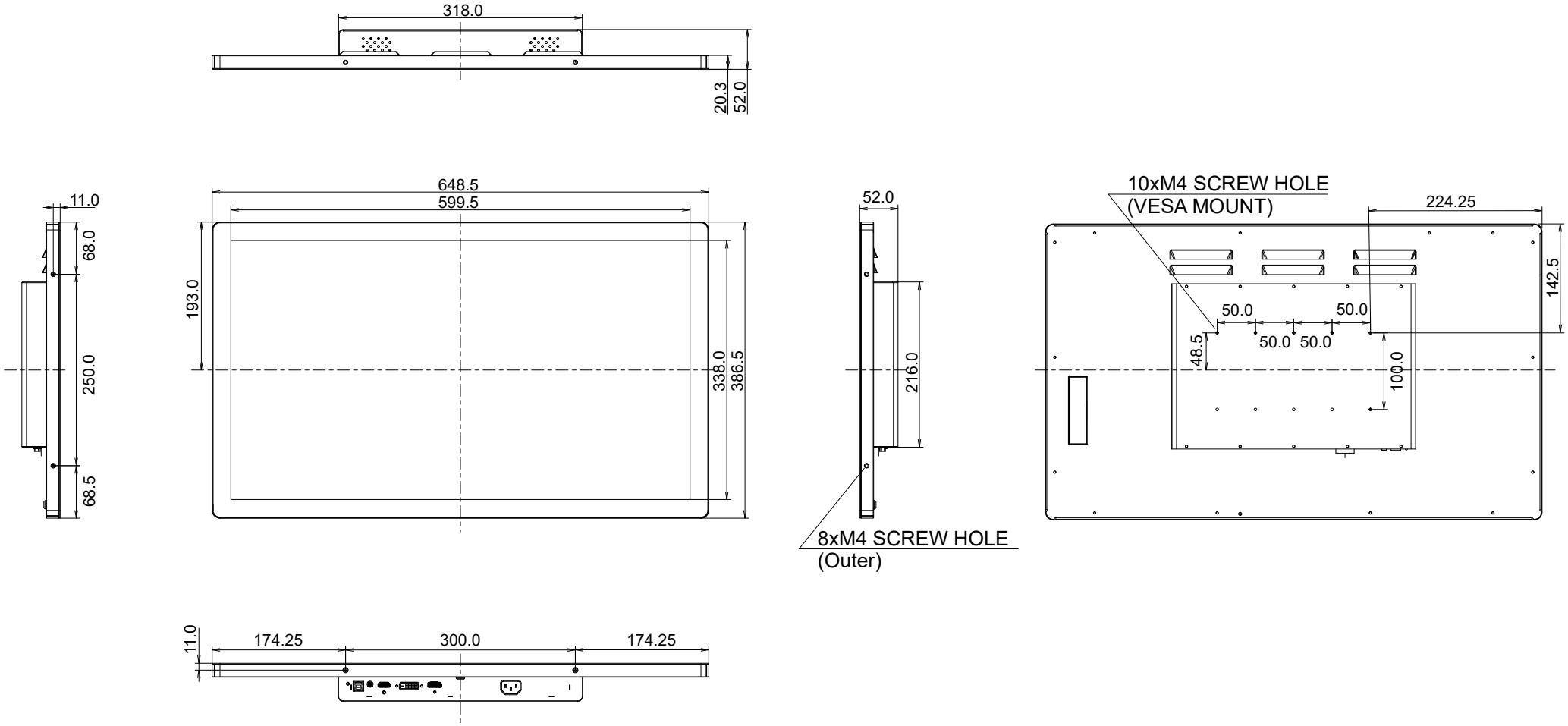
318.0
20.3
52.0
11.0
68.0
250.0
68.5
648.5
599.5
193.0
338.0
386.5
52.0
216.0
8xM4 SCREW HOLE
(Outer)
10xM4 SCREW HOLE
(VESA MOUNT)
224.25
142.5
50.0
50.0
50.0
50.0
48.5
100.0
11.0
174.25
300.0
174.25