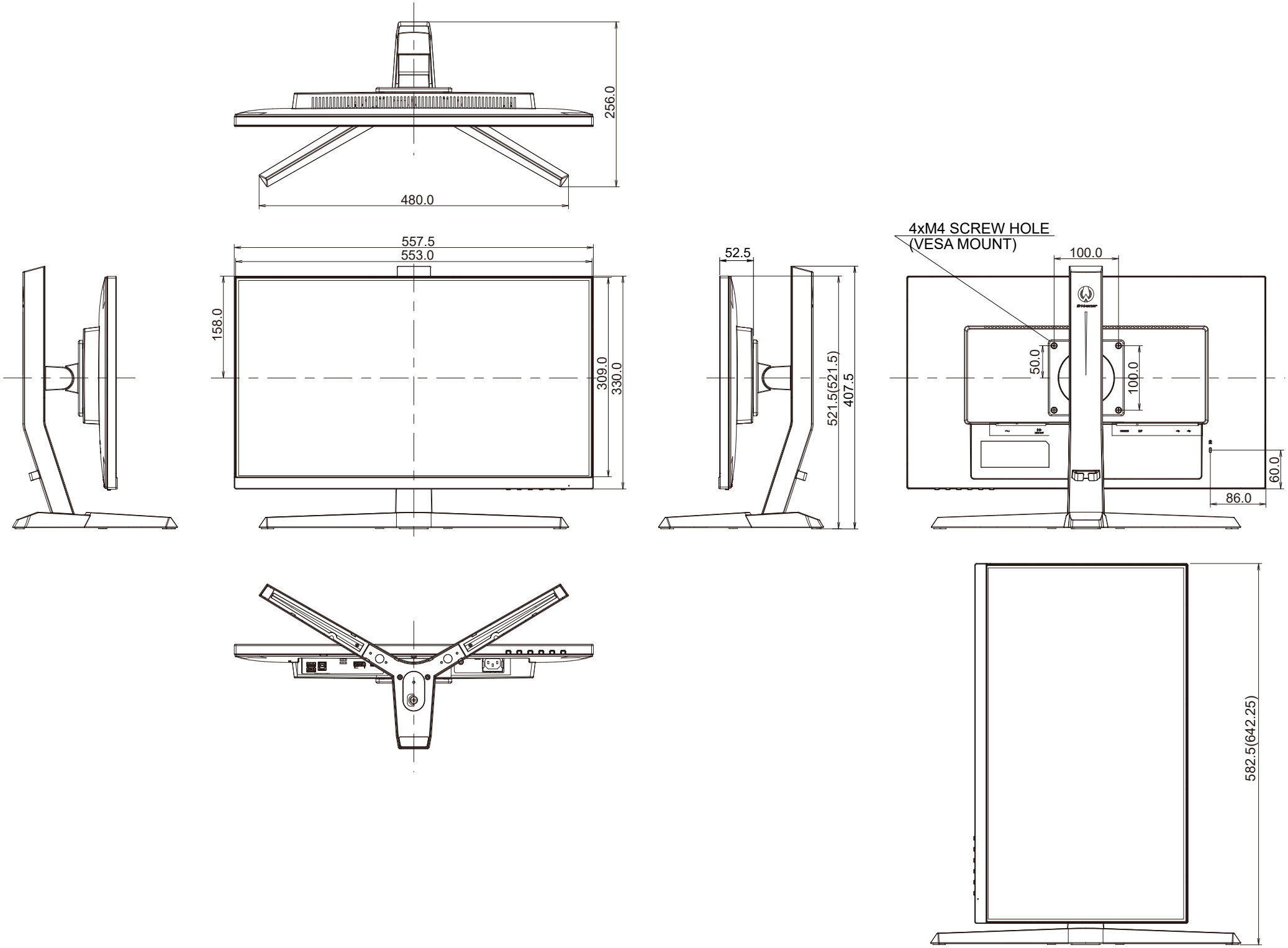
256.0
480.0
557.5
553.0
158.0
309.0
330.0
52.5
521.5(521.5)
407.5
4xM4 SCREW HOLE
(VESA MOUNT)
100.0
50.0
100.0
60.0
86.0
582.5(642.25)