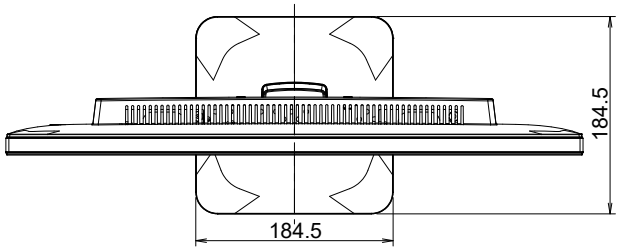
184.5
184.5

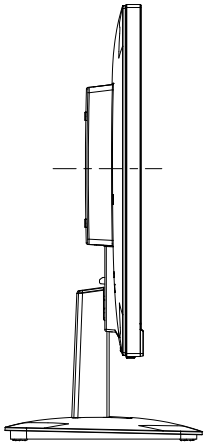

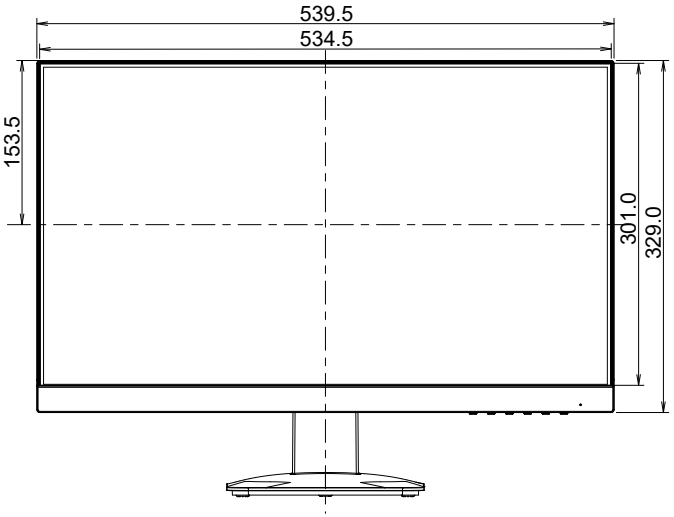
539.5
534.5
153.5
301.0
329.0

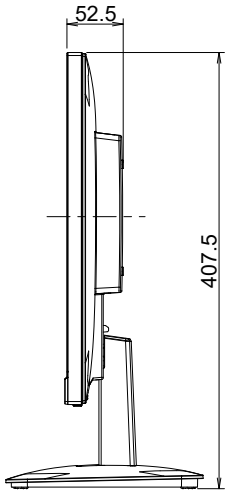
52.5
407.5

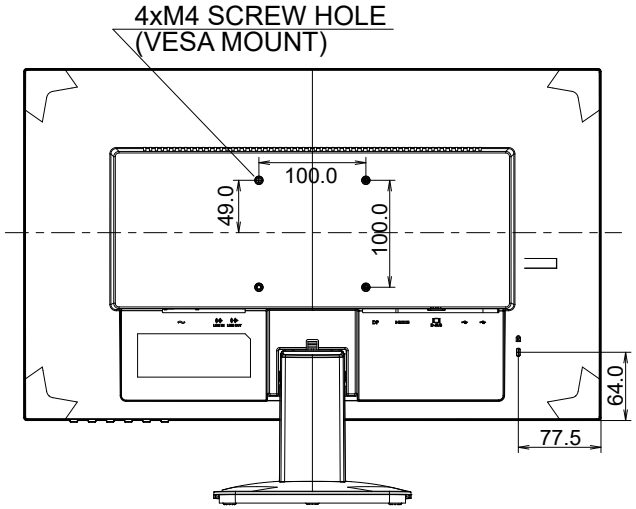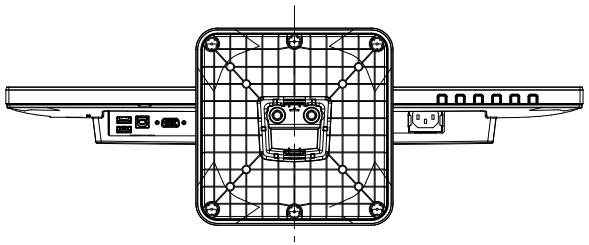
4xM4 SCREW HOLE
(VESA MOUNT)
100.0
49.0
100.0
64.0
77.5