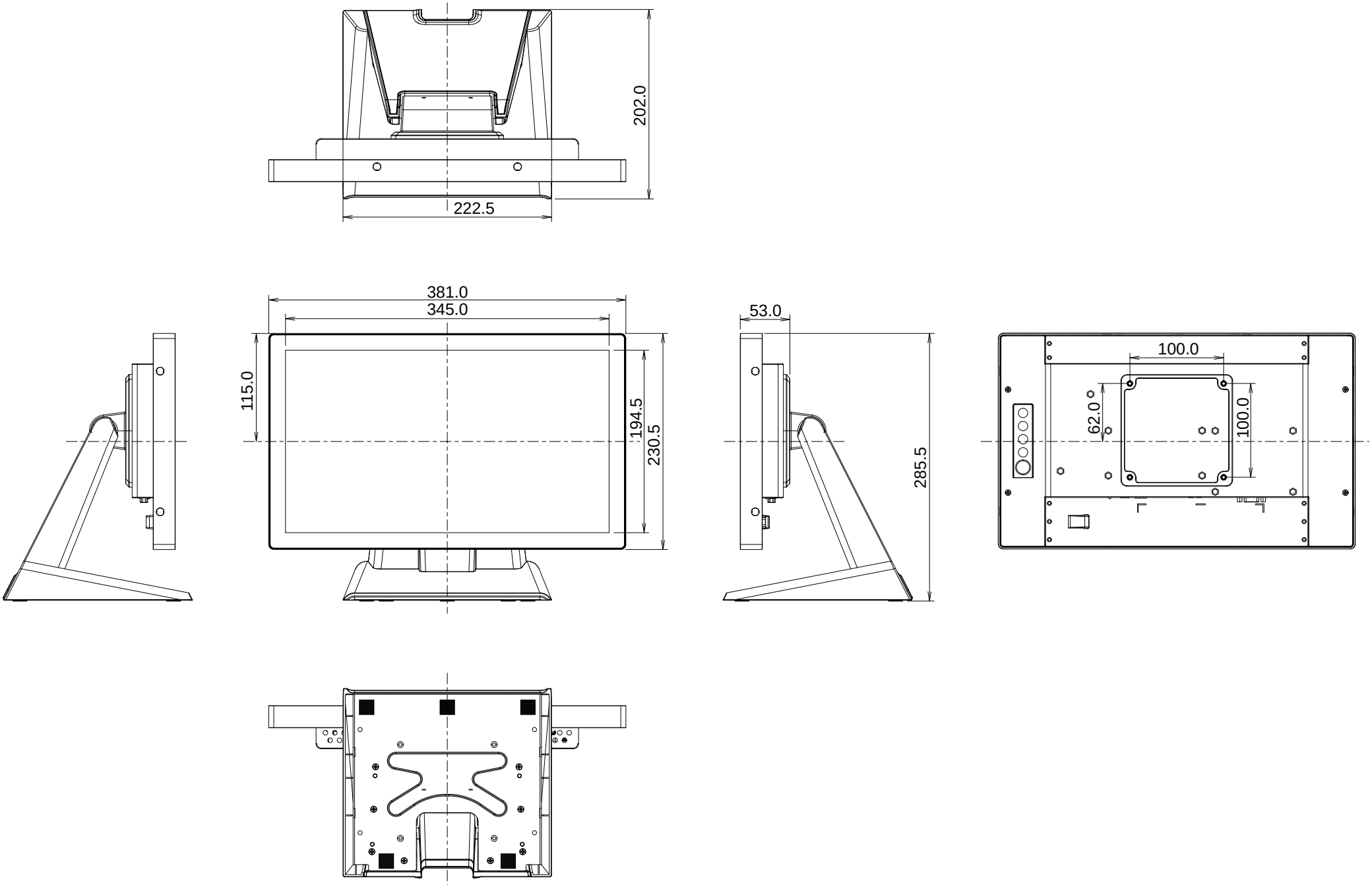
202.0
222.5
381.0
345.0
115.0
194.5
230.5
53.0
285.5
100.0
62.0
100.0