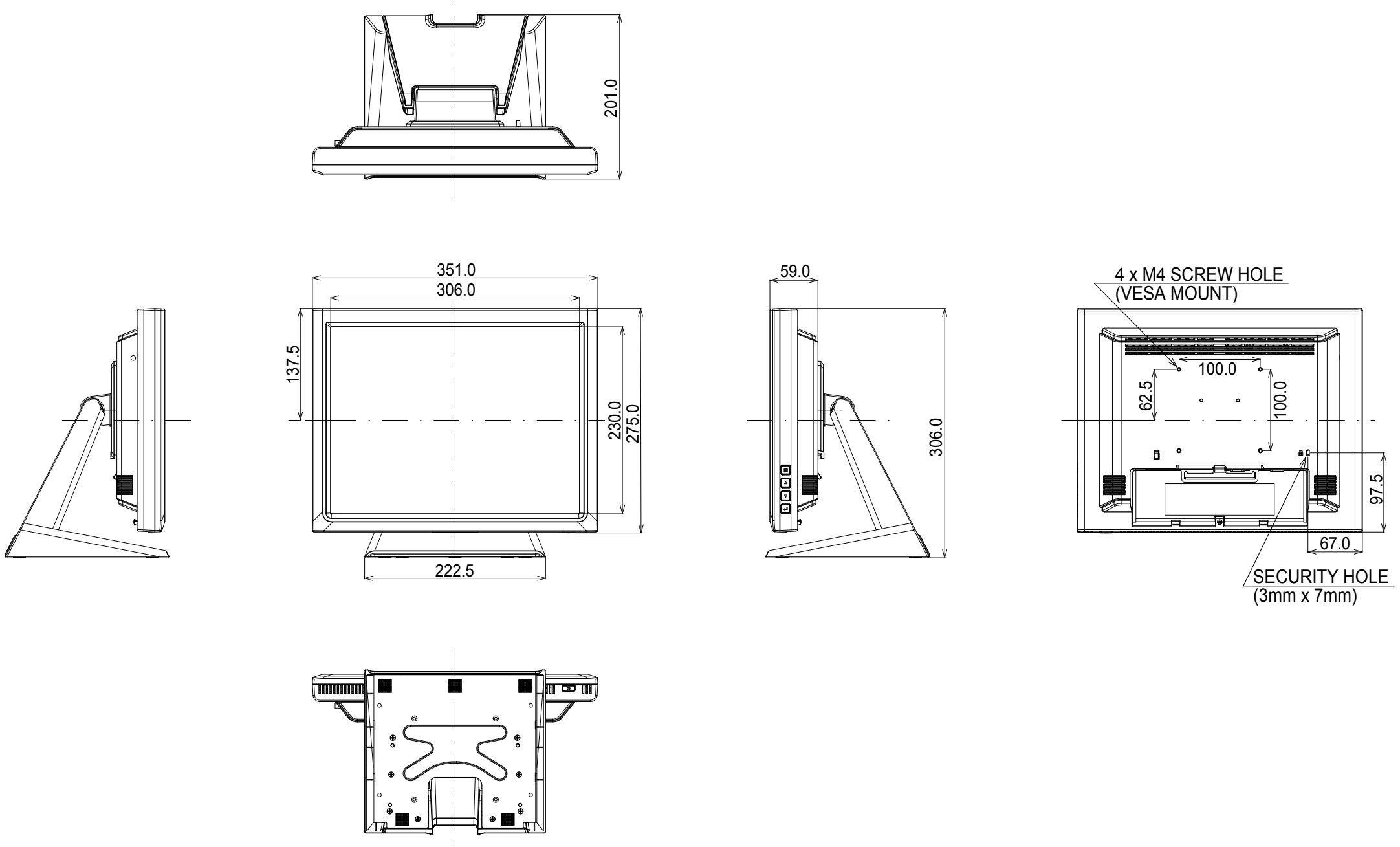
201.0
351.0
306.0
137.5
230.0
275.0
222.5
59.0
306.0
4 x M4 SCREW HOLE
(VESA MOUNT)
100.0
62.5
100.0
97.5
67.0
SECURITY HOLE
(3mm x 7mm)