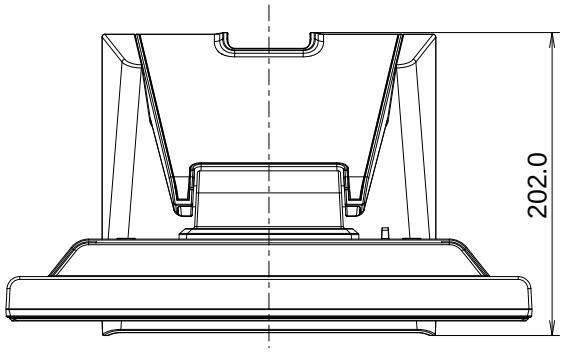
202.0

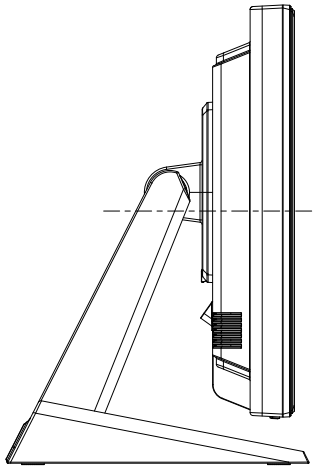

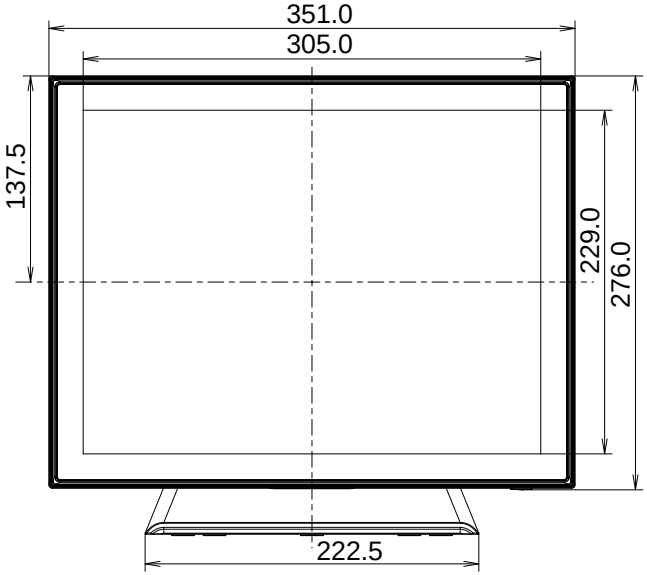
351.0
305.0
137.5
229.0
276.0
222.5

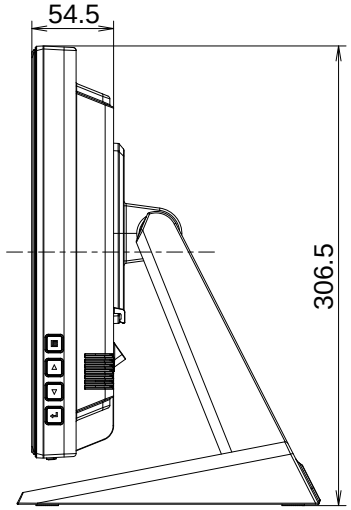
54.5
306.5

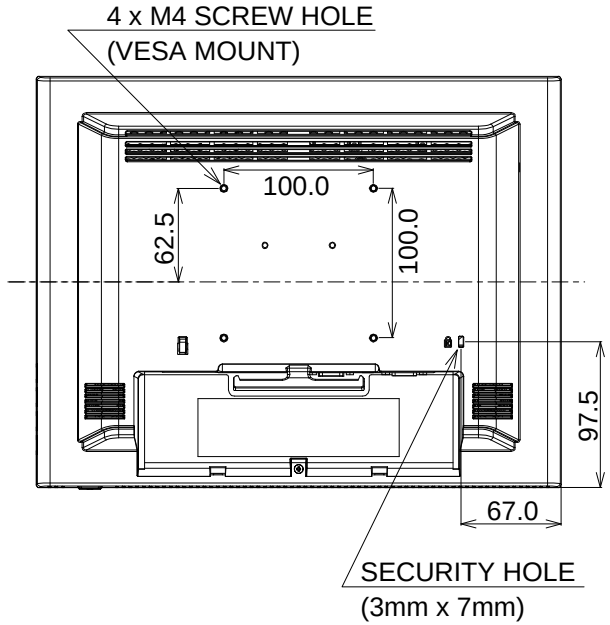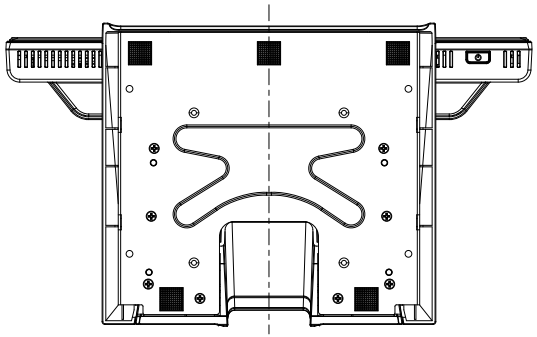
4 x M4 SCREW HOLE
(VESA MOUNT)
100.0
62.5
100.0
97.5
67.0
SECURITY HOLE
(3mm x 7mm)