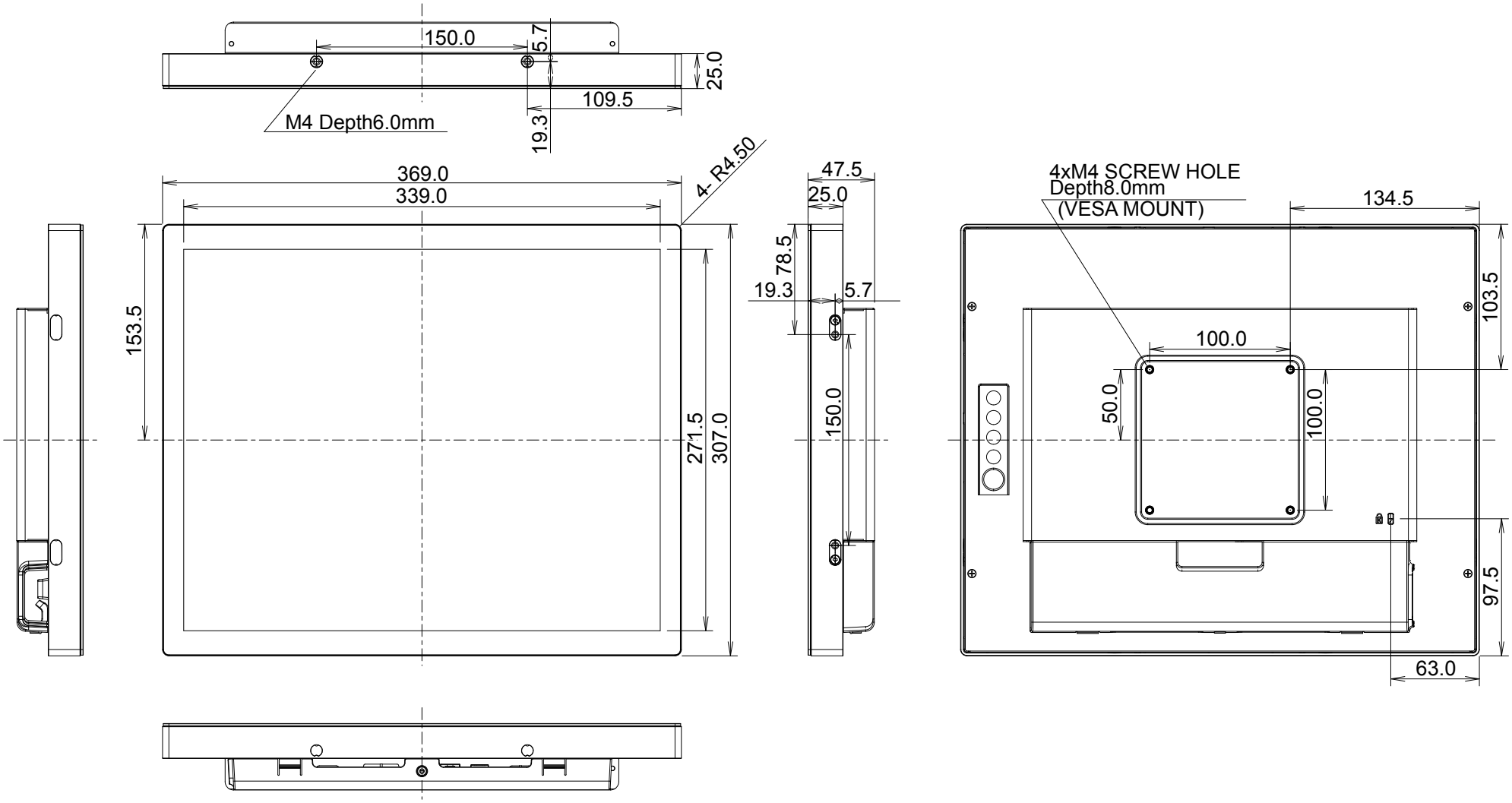
150.0
5.7
25.0
109.5
M4 Depth6.0mm
19.3
369.0
339.0
4- R4.50
153.5
271.5
307.0
47.5
25.0
78.5
19.3
5.7
150.0
4xM4 SCREW HOLE
Depth8.0mm
(VESA MOUNT)
134.5
103.5
100.0
50.0
100.0
97.5
63.0