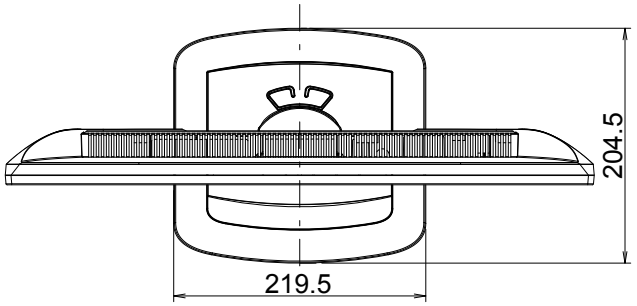
204.5
219.5

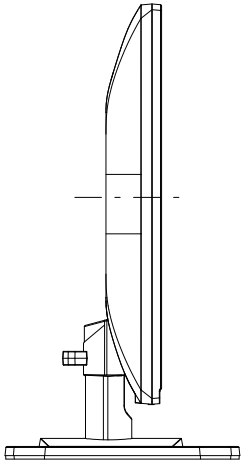

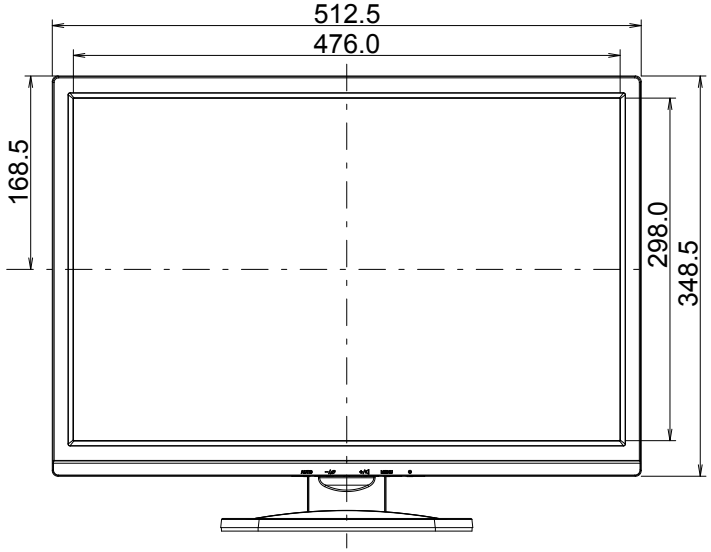
512.5
476.0
168.5
298.0
348.5

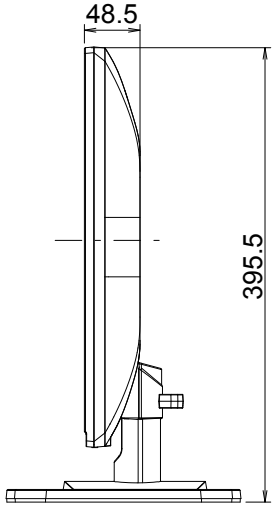
48.5
395.5

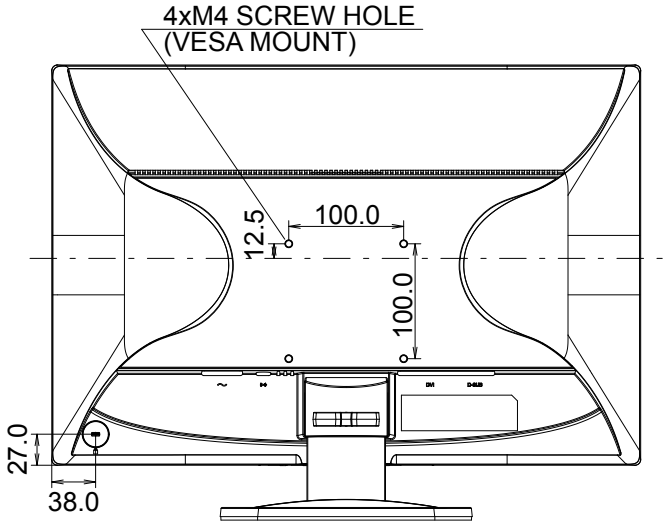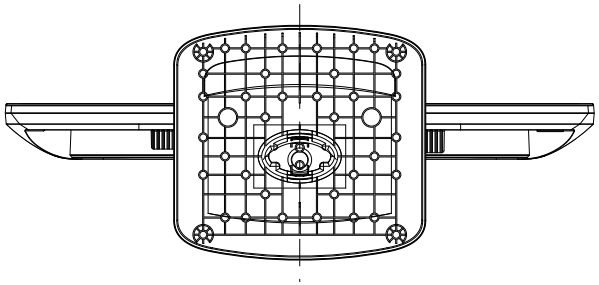
4xM4 SCREW HOLE
(VESA MOUNT)
12.5
100.0
100.0
27.0
38.0