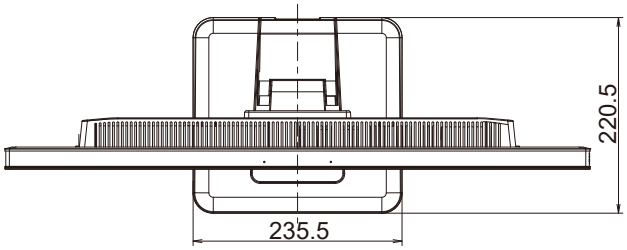
220.5
235.5

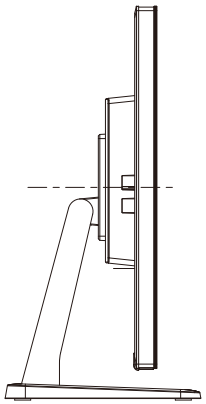

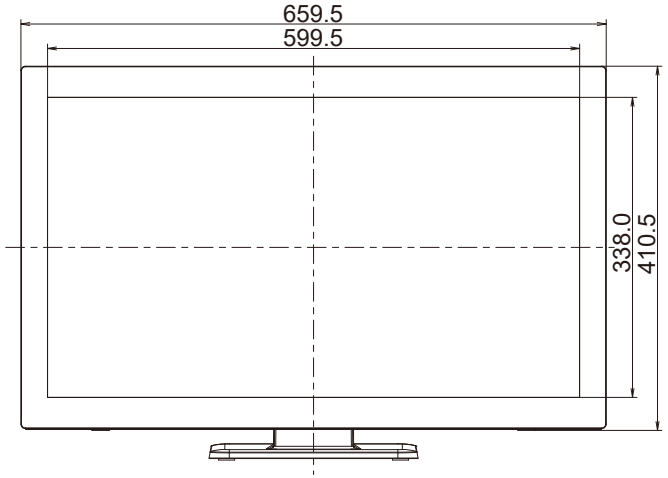
659.5
599.5
338.0
410.5

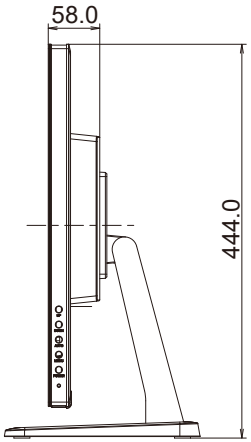
58.0
444.0

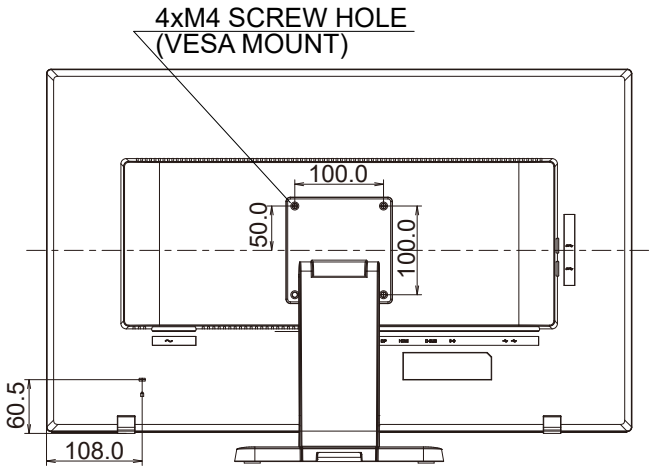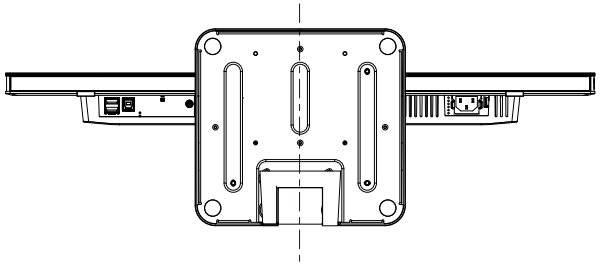
4xM4 SCREW HOLE
(VESA MOUNT)
100.0
50.0
100.0
60.5
108.0