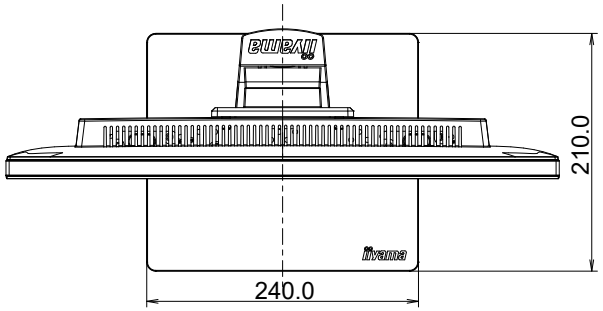
210.0
240.0

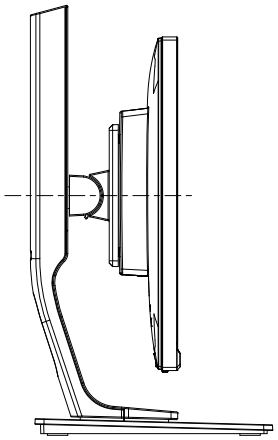

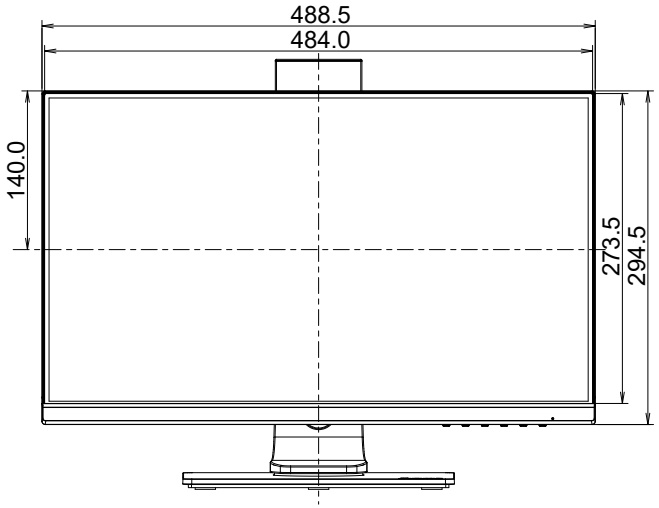
488.5
484.0
140.0
273.5
294.5

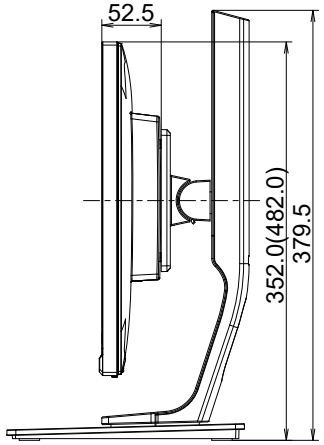
52.5
352.0(482.0)
379.5

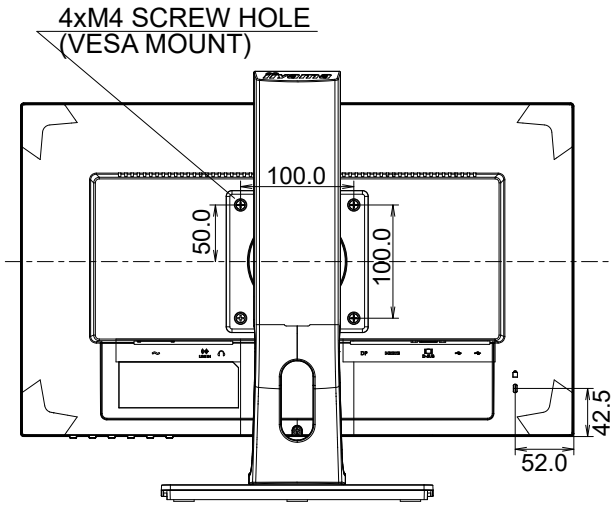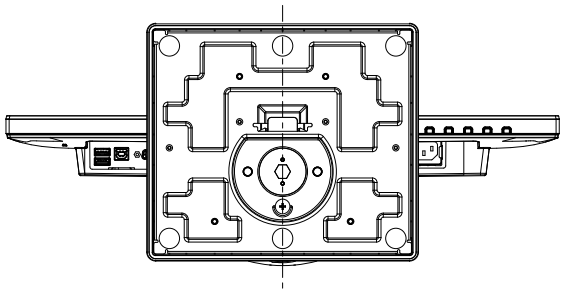
4xM4 SCREW HOLE
(VESA MOUNT)
100.0
50.0
100.0
42.5
52.0