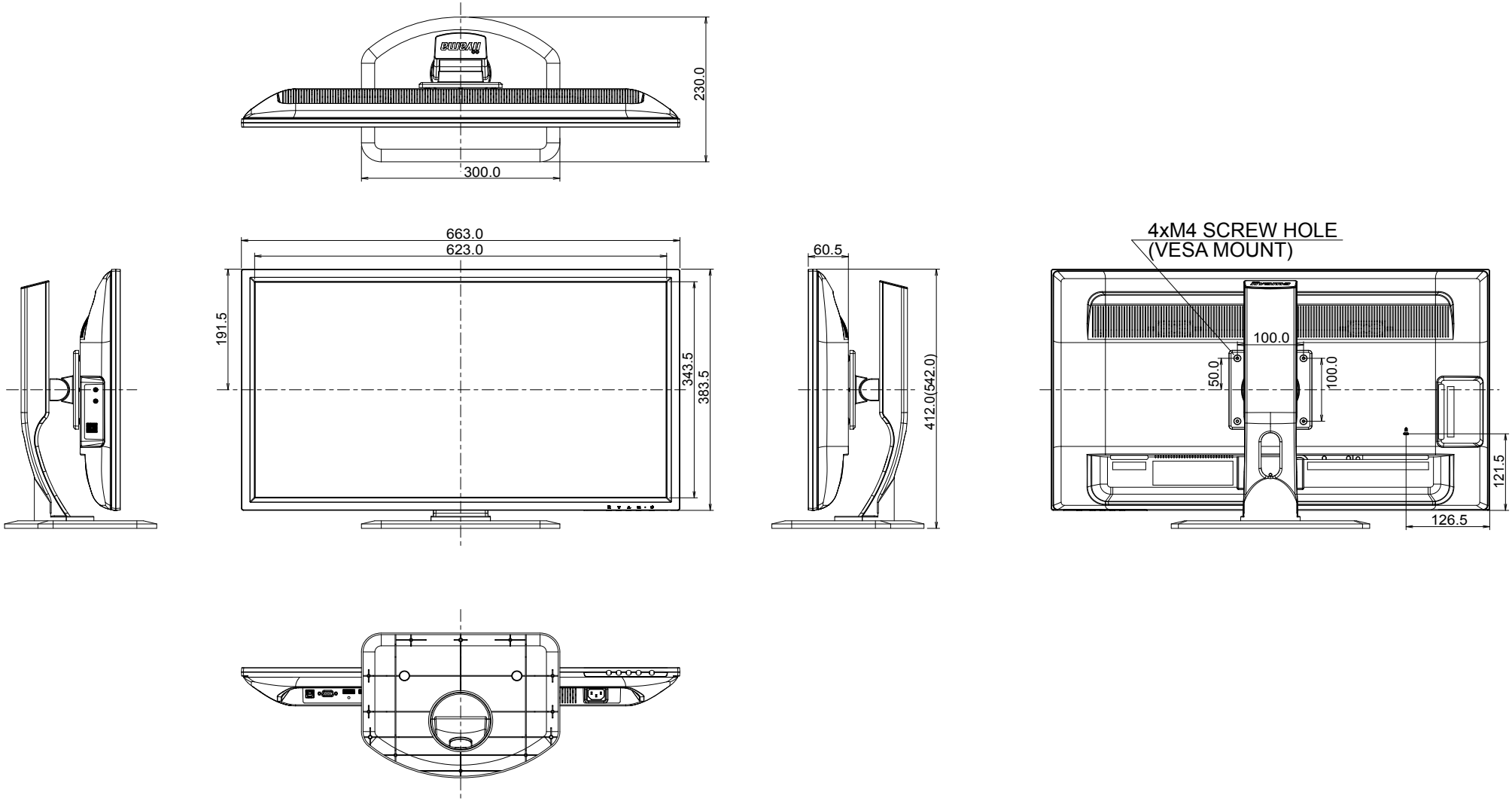
230.0
300.0
663.0
623.0
191.5
343.5
383.5
60.5
412.0(542.0)
4xM4 SCREW HOLE
(VESA MOUNT)
100.0
50.0
100.0
121.5
126.5