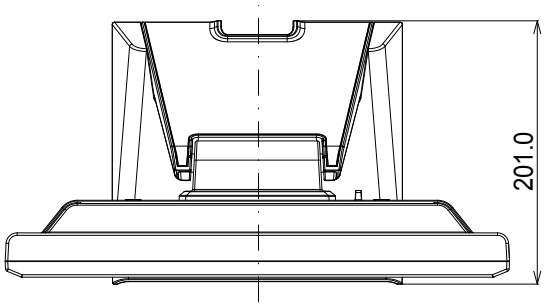
201.0

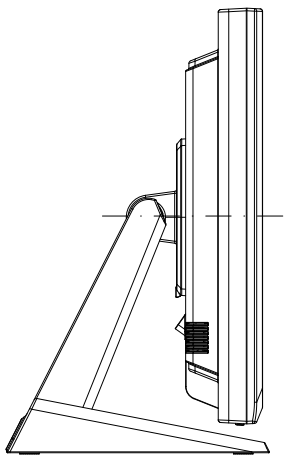

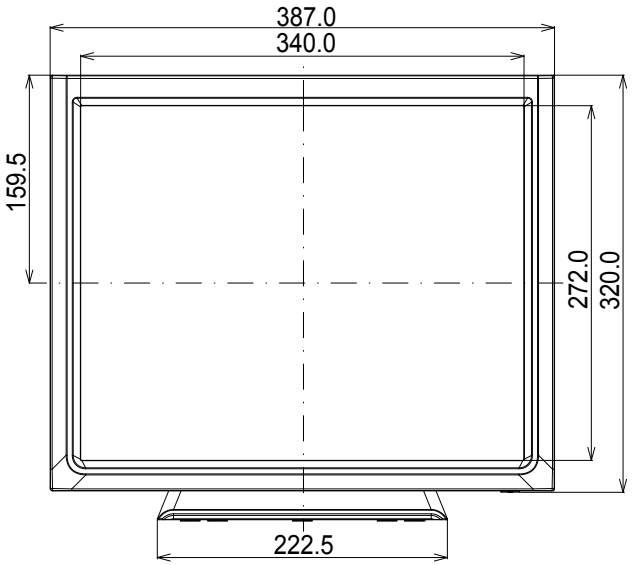
387.0
340.0
159.5
272.0
320.0
222.5

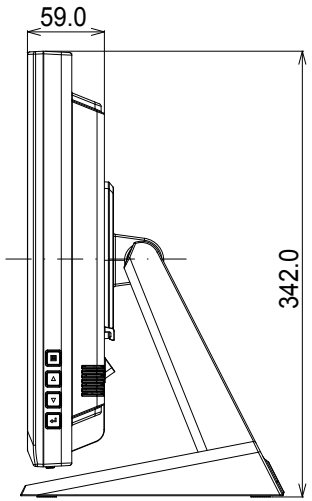
59.0
342.0

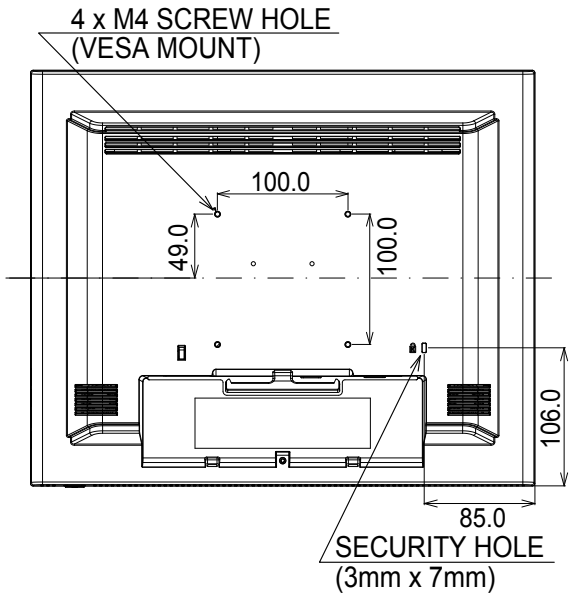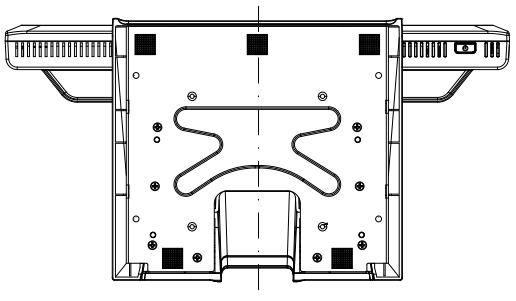
4 x M4 SCREW HOLE
(VESA MOUNT)
100.0
49.0
100.0
106.0
85.0
SECURITY HOLE
(3mm x 7mm)