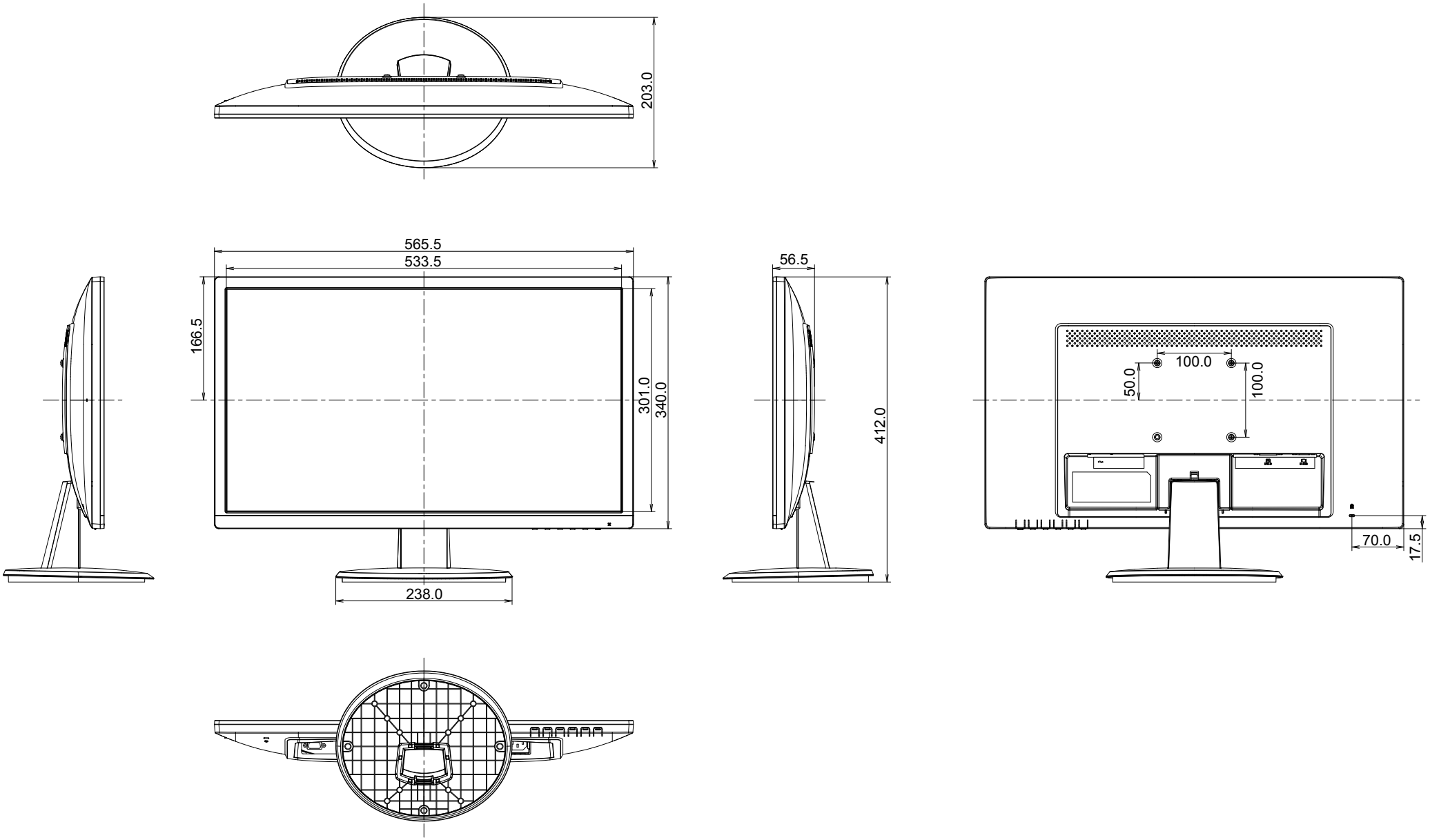
203.0
565.5
533.5
166.5
301.0
340.0
238.0
56.5
412.0
100.0
50.0
100.0
70.0
17.5