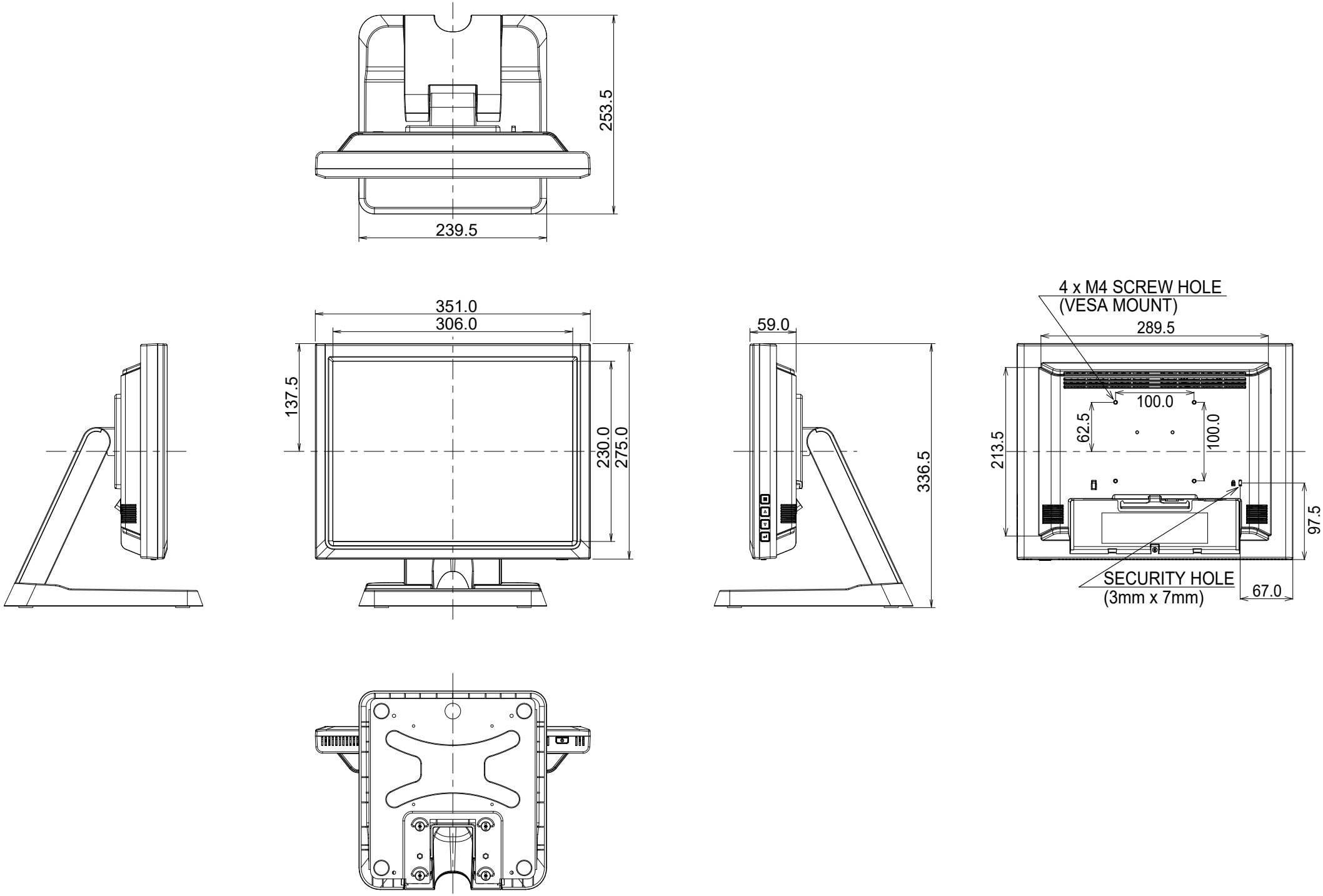
253.5
239.5
351.0
306.0
137.5
230.0
275.0
59.0
336.5
4 x M4 SCREW HOLE
(VESA MOUNT)
289.5
100.0
62.5
100.0
213.5
97.5
SECURITY HOLE
(3mm x 7mm)
67.0