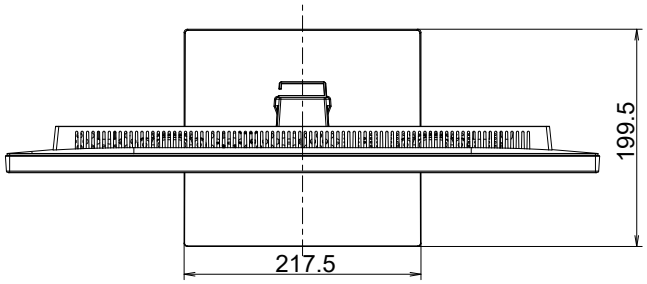
199.5
217.5

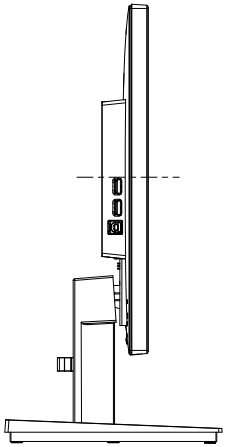

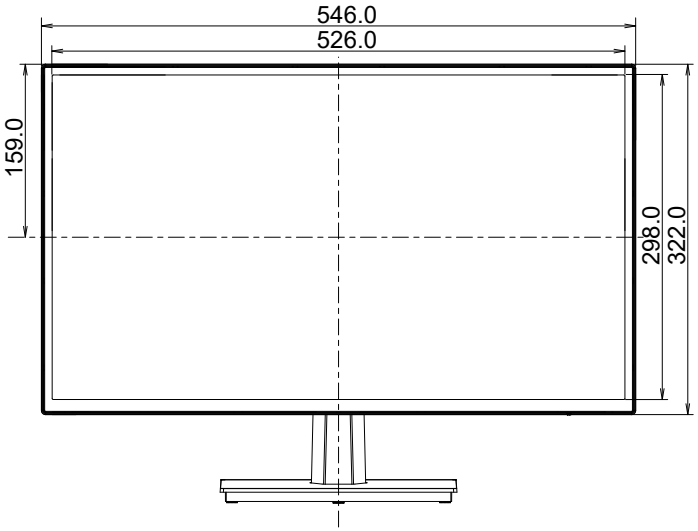
546.0
526.0
159.0
298.0
322.0

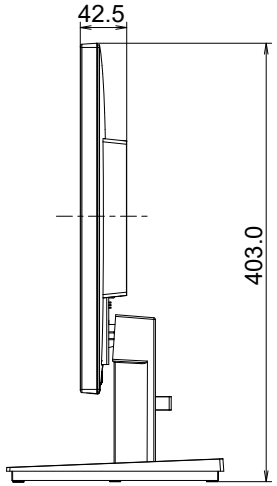
42.5
403.0

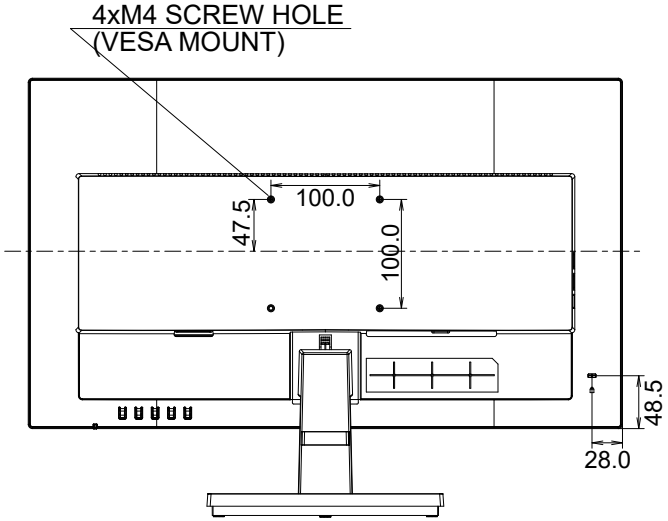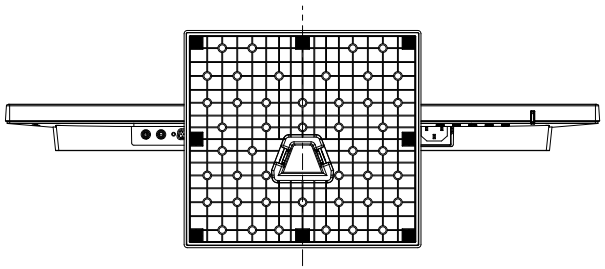
4xM4 SCREW HOLE
(VESA MOUNT)
100.0
47.5
100.0
48.5
28.0