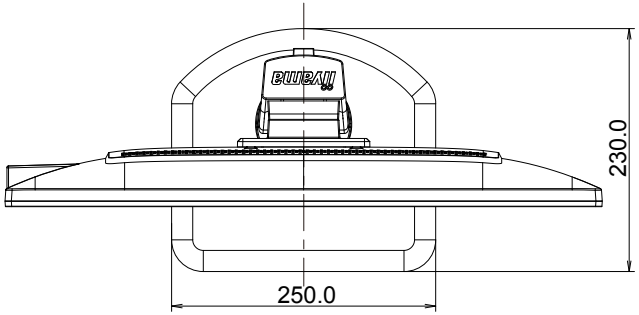
230.0
250.0

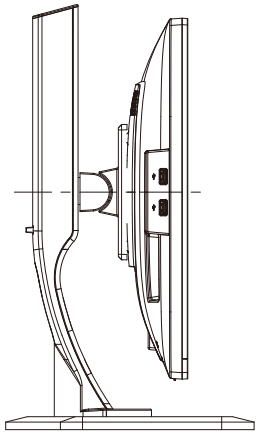

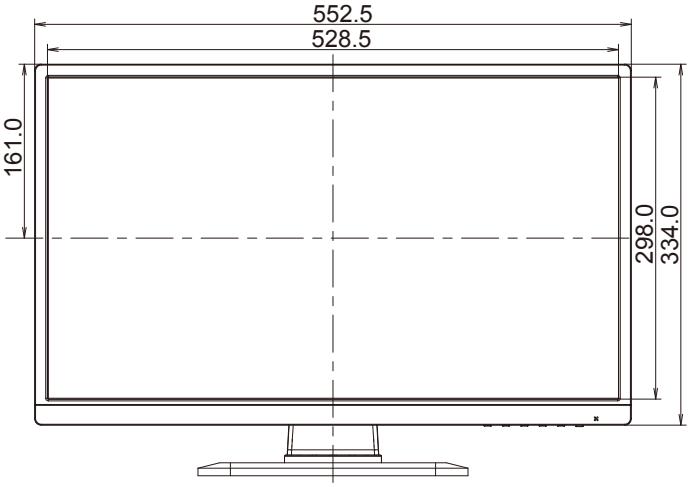
552.5
528.5
161.0
298.0
334.0

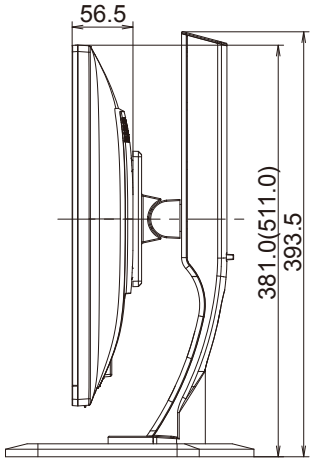
56.5
381.0(511.0)
393.5

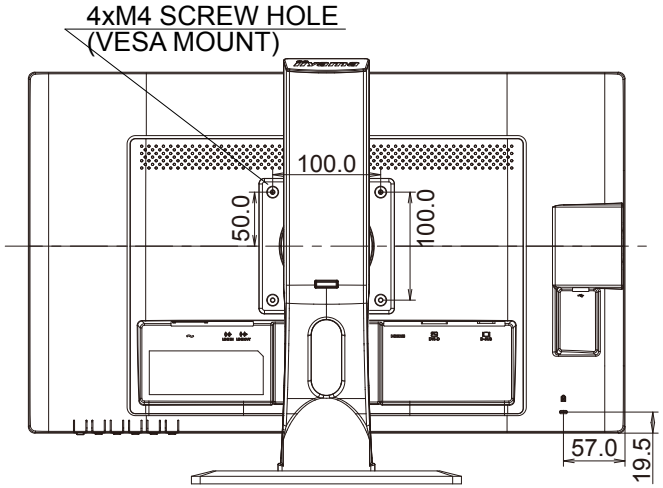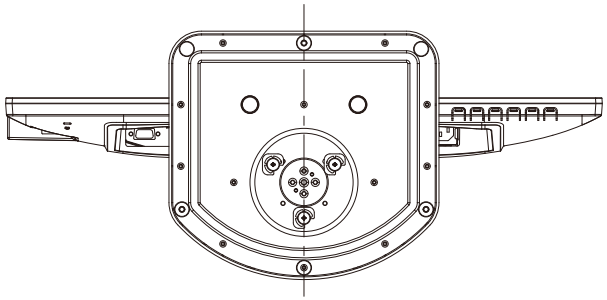
4xM4 SCREW HOLE
(VESA MOUNT)
100.0
50.0
100.0
57.0
19.5