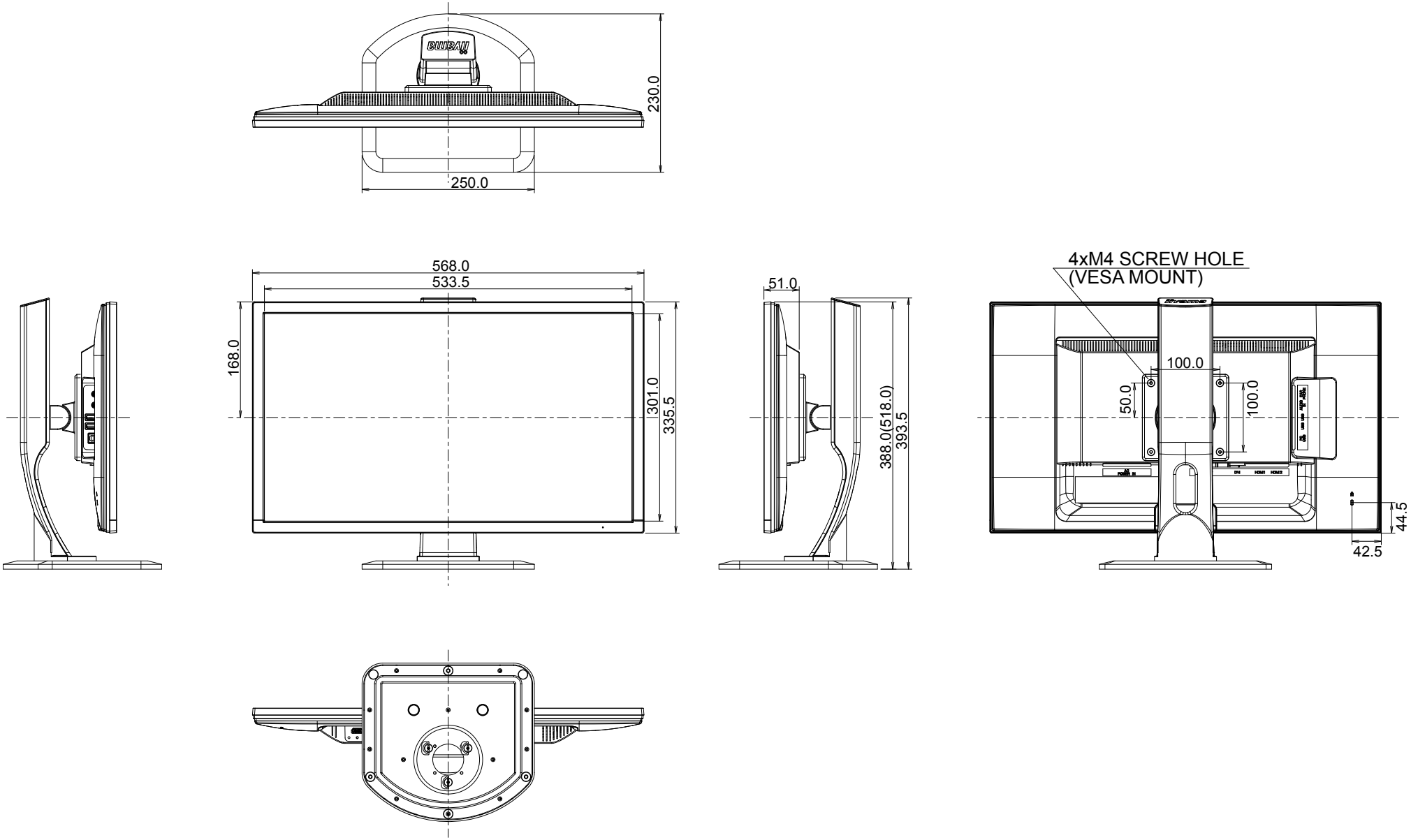
230.0
250.0
568.0
533.5
168.0
301.0
335.5
51.0
388.0(518.0)
393.5
4xM4 SCREW HOLE
(VESA MOUNT)
100.0
50.0
100.0
44.5
42.5